"COMPUTATIONAL FLUID DYNAMICS MODELLING OF AN EXHAUST SYSTEM OF AN INTERNAL COMBUSTION ENGINE WORKING BIO-CNG FUEL"

Mr. Shrikant M. Ingawale[1*], Mr. Dr. J. S. Bagi[2], Ms. L. S. Nikam[3]

[1] *(Student) Energy Technology, Department of Technology Shivaji University Kolhapur, India*

[2] *(Director) Department of Technology, Shivaji University, Kolhapur, India*

[3] *(Assistant Professor) Energy Technology, Department of Technology, Shivaji University. Kolhapur, India.*

[1] *shrikantingawale555@gmail.com*

Abstract*—*In the past few decades, the use of fossil fuel has shown an adverse effect on the earth's surface temperature as their combustion causes the emission of greenhouse gases (GHG's) into the environment. The GHG's are responsible for Air Pollution, and Extreme Weather Conditions. Also, the resources of fossil fuels are exhausting rapidly and need millions of years to reproduce them. Currently, the transportation sector is the major user of fossil fuels. So the time has come to replace these non-renewable and high-polluting fuels with renewable and less polluting fuels. Biofuels are a good replacement for fossil fuels but need some optimization in the engine components. In this research, the Computational Fluid Dynamic model is prepared for Pressure, Temperature, and Velocity distribution through the exhaust system of a four-stroke IC Engine working on Bio-CNG fuel. The results show that there is scope to optimize the exhaust system of an existing engine.

Keywords*—*CFD, Bio-CNG, Pressure, Temperature, Velocity, Computational Fluid Dynamics Modelling, Exhaust System, IC Engine, ANSYS, Four Stroke.

1.Introduction

In this research, ANSYS 2020 R2 software is used for computational Fluid Dynamics Modelling. Ansys is a simulation software used across the product life cycle for engineering simulation. The software uses the Mechanical Finite Element Analysis to simulate the computer-based models for components of the machine, static and dynamic structures, and electronic components for analyzing their strength, elasticity, toughness, electromagnetism, temperature distribution, pressure distribution, fluid flow, and other attributes. Ansys can identify the behavior of the product under different circumstances without building the real product to conduct destructive tests or crash tests. In this research, Ansys is used to simulate the Temperature, Pressure, and Velocity distribution through the Exhaust system for given boundary conditions.

2.Methodology

The methodology needed to perform any simulation in the Ansys software is different for the different analysis systems. The data used in this article is obtained from experimentation carried during the research in the testing laboratory. The software used for performance evaluation is IC EngineSoft 9.0.

2.1. Engine Details: [1]

- **Power**: 3.5 kW
- **RPM**: 1500
- **No. of Cylinder:** 1
- **No. of Strokes:** 4 Stroke
- **Cooling Type:** Water Cooled
- **Speed Type:** Constant
- **Cylinder Bore Diameter:** 87.50 mm.
- **Stroke Length:** 110 mm
- **Swept Volume:** 661.45 (cc)
- **Compression Ratio:** 12-18
- **Fuel Used:** Bio-CNG

- **Calorific Value:** $47000\ kJ/kg$



Figure 1: Experimental Setup

2.2. Methodology:

2.2.1. Analysis System:

In this research, the simulation is done for the behavior of exhaust gases flowing through the exhaust system so Fluid Flow (Fluent) analysis system is selected. Ansys Fluent is used to study the properties of fluid flow such as heat transfer, turbulence, pressure, velocity distribution through complex geometries. The fluids like air, water, and any other user-defined can be modeled and simulated as per the requirements.

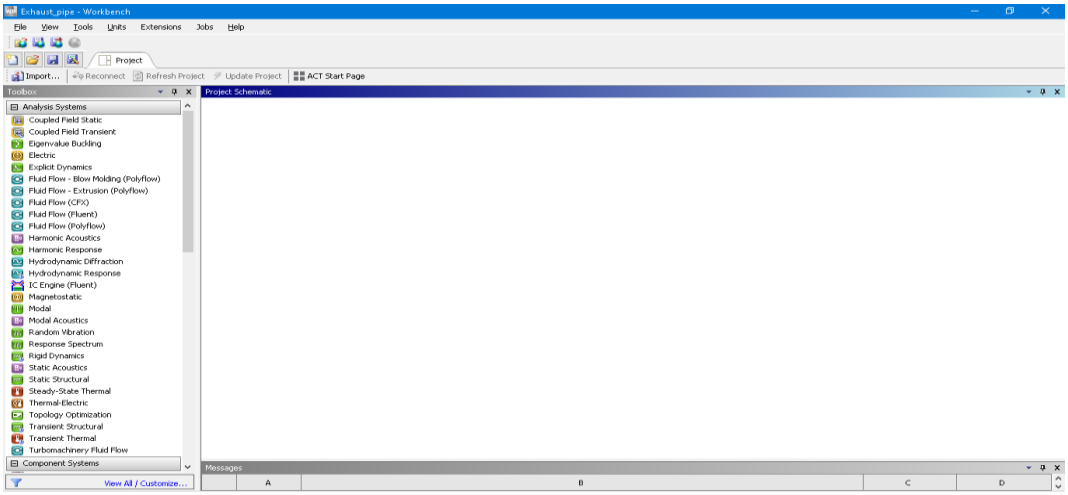

Figure 2: Analysis System Interface

2.2.2.Geometry:

Generally, design modular is used to draw the geometries in Ansys. The geometry used in this research is drawn in the CATIA VR21 due to its complexity in the contact regions between fluids and pipe walls. After importing the geometry the operational commands like fill and

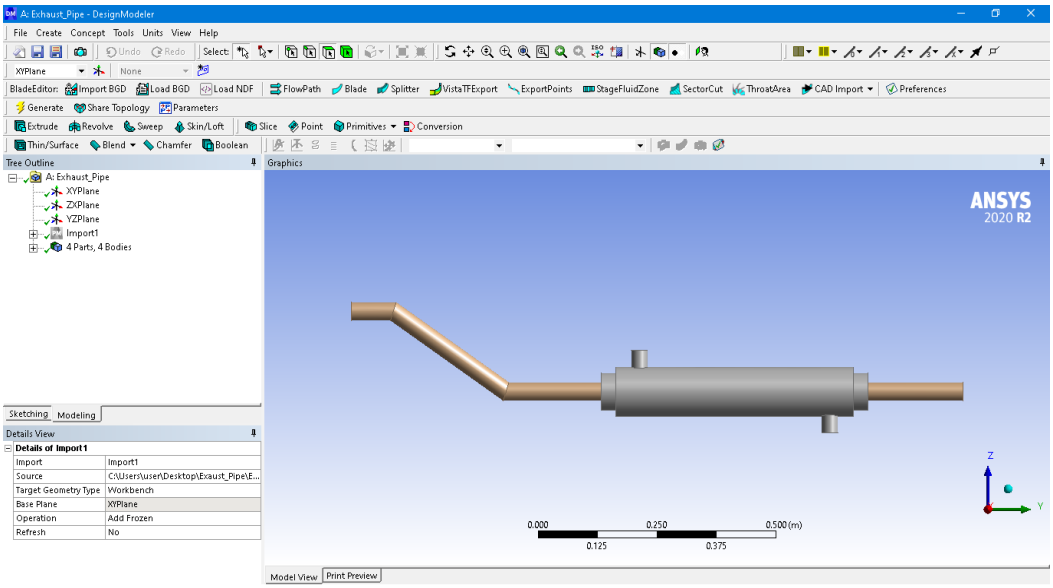

unite are used to fill the cavities and to unite multiple bodies respectively.

Figure 3: Geometry for Exhaust System

2.2.3.Meshing:

After completion of geometrical design, the next step to be followed is meshing. In this step, large geometry is converted into small elements. The quality of the meshing should be maximum and depends upon the appropriate selection of method and element sizing. In this research, the following options are selected during the simulations;

2.2.4.Mesh

2.2.4.1.Method: Automatic (For all Bodies)

The automatic meshing is used because here we are dealing with multiple contact regions. So, if we choose different methods and element sizing for different components the software is unable to understand the contact regions. It will help to keep meshing easily for simulation.

2.2.4.2.Element size: 5mm (For all Bodies)

2.2.4.3.Mesh Quality:

1) **Element Quality- Ideally=1**
   - Max= 0.99979
   - Min= 0.10629
   - Avg= 0.80634

2) **Aspect Ratio-Ideally=1**
   - Max=15.087
   - Min=1.1632
   - Avg=1.9597

3) **Jacobian Ratio- Ideally=1**
   - Max=2.6021
   - Min= 1
   - Avg= 1.062

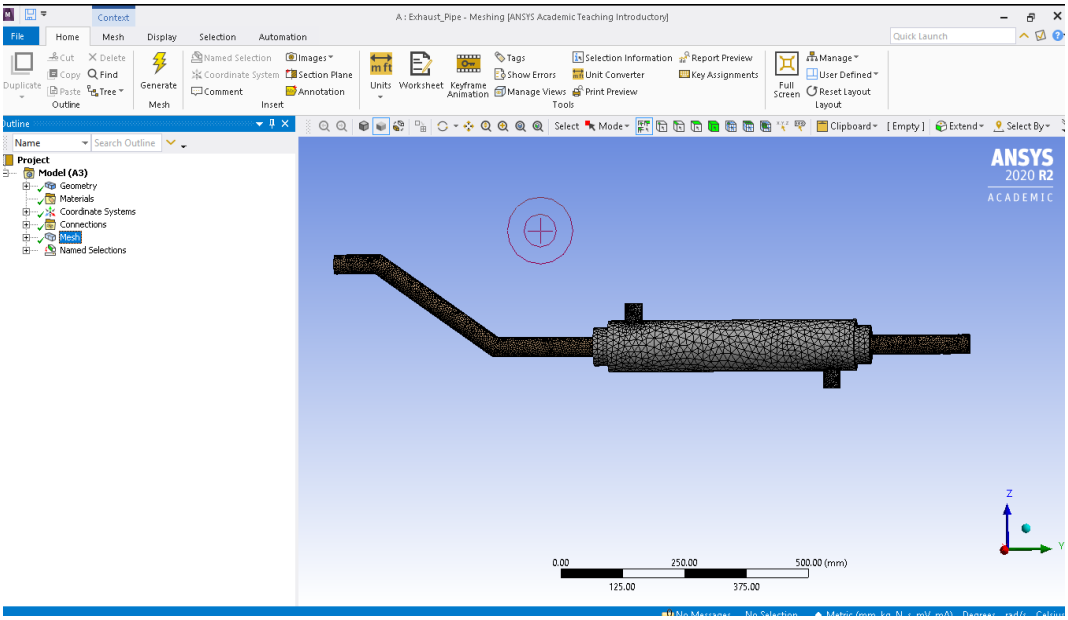

Figure 4: Meshing Interface

2.2.5.Setup:

The Setup is a step in which we define the problem. The options selected in the setup are explained below;

2.2.5.1.General:

- Type: Pressure based
- Velocity Formulation: Absolute
- Time: Transient
- Gravity: z= $-9.81\ m/s^2$

2.2.5.2.Model:

- Energy Equation: ON
- Turbulence Model: $k-\mathcal{E}$ ($2eq^n$)
- Near Wall Treatment: Enhanced Wall Treatment

2.2.5.3.Material:

- Fluid: Water-liquid
  : Air
- Solid: Steel
  : Aluminum

2.2.5.4.Cell Zone Condition:

- Fluid: Gas Body
  : Water Body
- Solid: Shell

2.2.5.5.Boundary Conditions:

These boundary conditions are taken from the data obtained by experimentation carried in the IC Engine Test Lab.

<u>INLET</u>

i. Gas inlet: Velocity= $29\ m/sec$ *(obtained from the digital vane type anemometer measurements*)
   : Pressure = $265000\ Pascal$ *(From PV Diagram generated during the experimentation on Bio-CNG fuelled IC Engine at 10ms fuel injector opening timing)*
   : Temperature = $362°C$ *(Temperature at exhaust valve measure by K-type thermocouple)*

ii. Water Inlet: Mass Flow rate =$75\ kg/hr$. *(pre-set value)*
   Temperature= $27°C$ *(Room temperature)*

OUTLET

i. Gas Outlet: Pressure = 0 Pa $(Gauge\ Pressure)$

Figure 5: Setup Interface

2.2.6.Solution:

In this step, methods to solve the problem defined in the setup are selected. The options that are selected in the solution step are explained below;

2.2.6.1. Method:

2.2.6.2.Solution Method: Pressure-Velocity Coupling

2.2.6.3.Scheme: Simple

2.2.6.4.Special Discretization:

- Gradient: Least Square cell Based
- Pressure: Second Order
- Momentum: Second-Order Upwind
- Turbulent Kinetic Energy: Second-Order Upwind
- Turbulent Dissipation Rate: Second-Order Upwind
- Energy: Second-Order Upwind

2.2.6.5.Initialization:

2.2.6.6.Initialization Method: Standard Method

2.2.6.7.Compute From: Gas_ Inlet

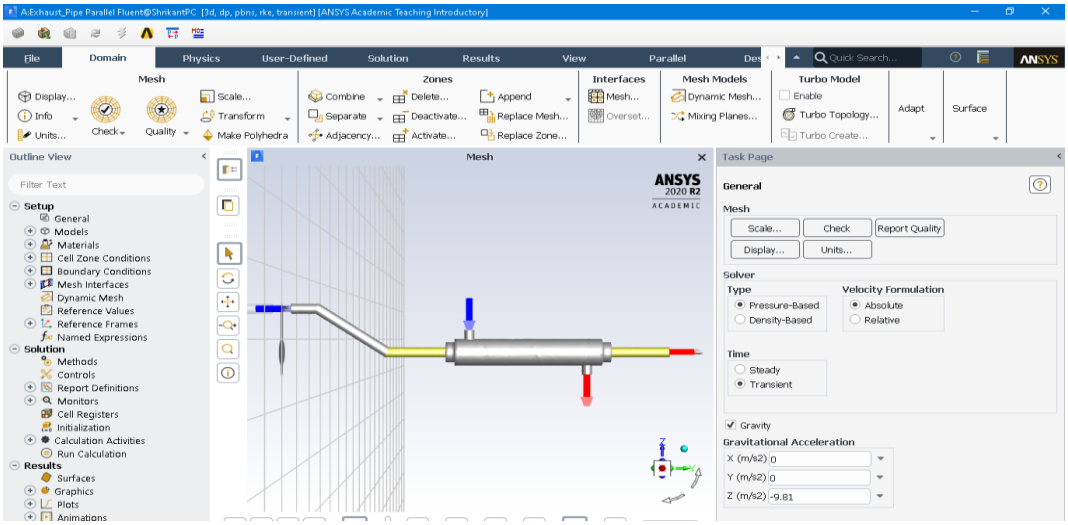

2.2.6.8.Reference Frame: Relative to Cell Zone

2.2.6.9.Initial Values:

- Gauge Pressure= $265000\ Pascal$
- X Velocity= $-2.244e^{-14}\ m/s$
- Y Velocity = $29\ m/s$
- Z Velocity = $7.46e^{-15}\ m/s$
- Turbulent Kinetic Energy = $3.154\ m^2/s^2$
- Turbulent Dissipation rate = $65.74\ m^2/s^3$

- Temperature: $362°C$

2.2.6.10. Run Calculation:

2.2.6.11. Time Advancement:

- Type: Fixed
- Method: User Specified

2.2.6.12. Parameters:

- Number of Time Steps = 0
- Time step Size = $1sec$
- Maximum Iterations =1000
- Reporting Interval = 1
- Profile Update Interval = 1

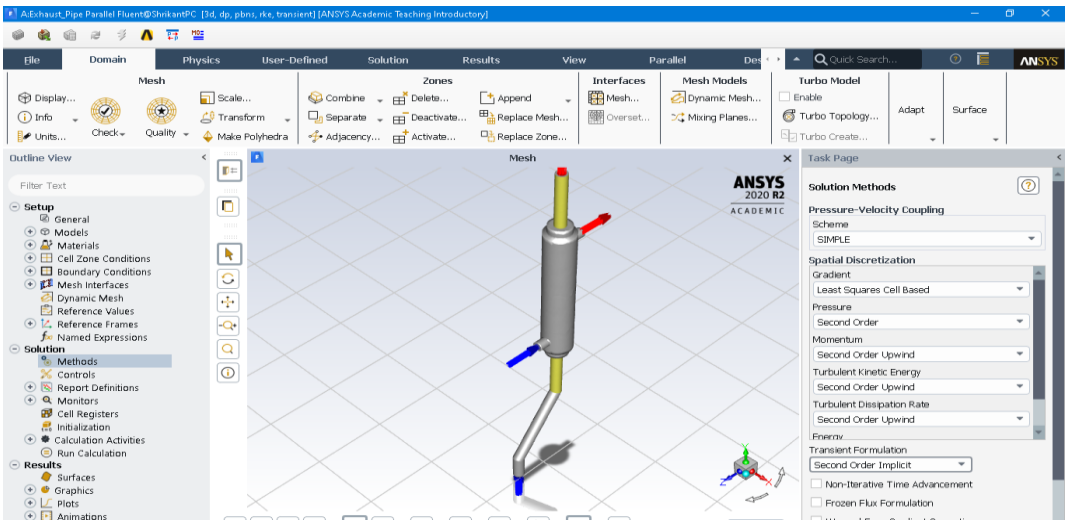

Figure 6: Solution Interface

3.Results and Discussion

3.1.Results:

After the calculation is completed the results are formulated according to the setup conditions are feed to the software. The following images show the various results after the simulation is completed.

3.1.1.Calorimeter Temperature Distribution:

The temperature in the calorimeter ranges from 486.046 K to 300.15 K. the boundary condition applied to the inlet of the calorimeter are $27°C$ and $75\ kg/hr$. The minimum temperature is observed at the inlet side of the calorimeter and the maximum temperature is

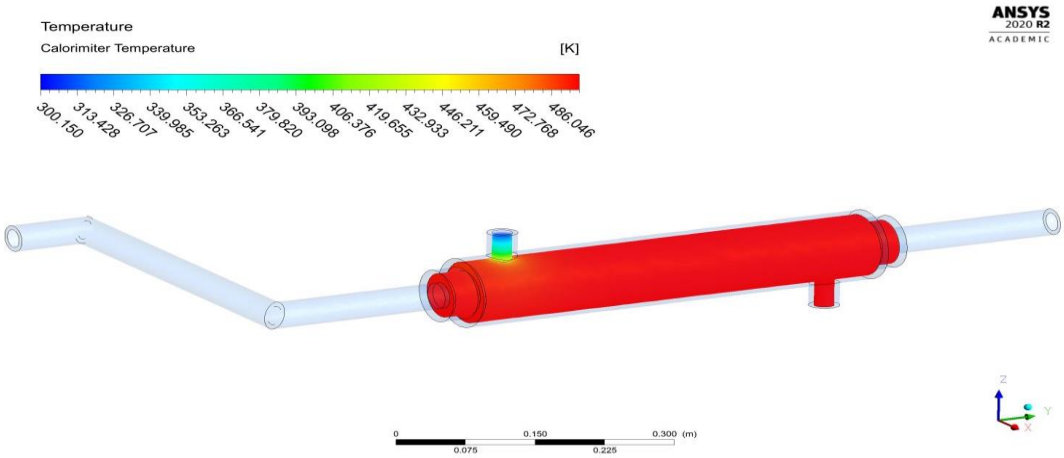

observed at the outlet side of the calorimeter.

Figure 7: Calorimeter Temperature

3.1.2.Exhaust Gas Pressure Distribution:

The following figure shows the exhaust gas pressure distribution through the exhaust pipe. The pressure ranges from 2265.207 Pa to -78.209 Pa. the maximum and minimum

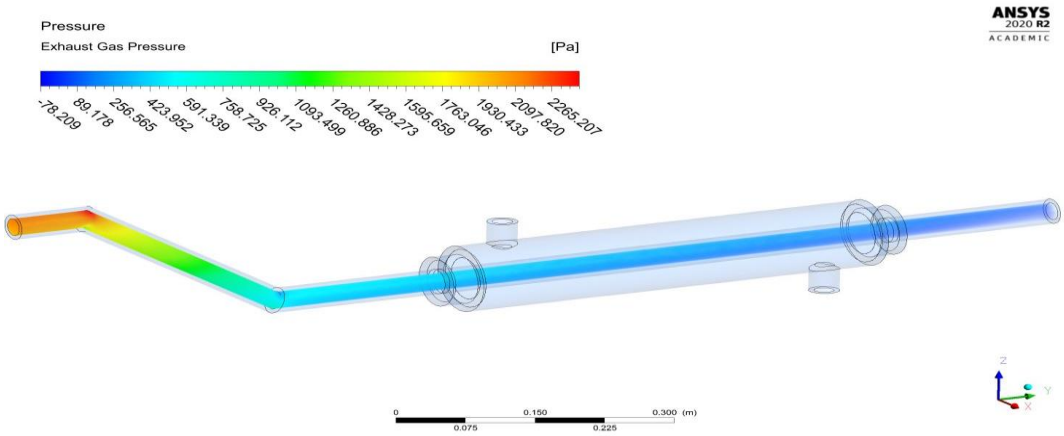

pressures are observed at the corners due to vortex generation.

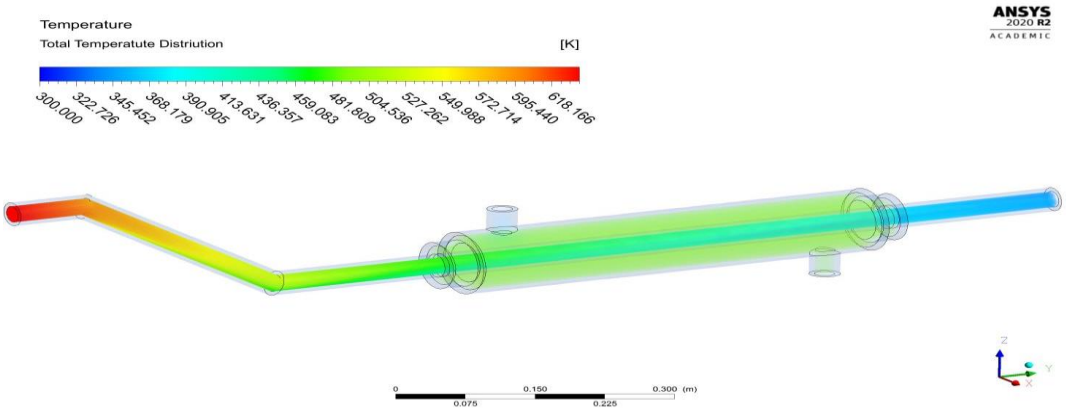

Figure 8: Exhaust Gas Pressure

3.1.3.Exhaust Gas pipe Temperature:

The following figure shows the temperature distribution of exhaust gases in the exhaust pipe. The temperature ranges from $630.646K$ to$545.430K$. The maximum temperature is observed at the inlet side of an exhaust pipe and the minimum temperature is observed on the outlet side of an exhaust pipe. The boundary condition applied to the temperature distribution is $362\ °C$.

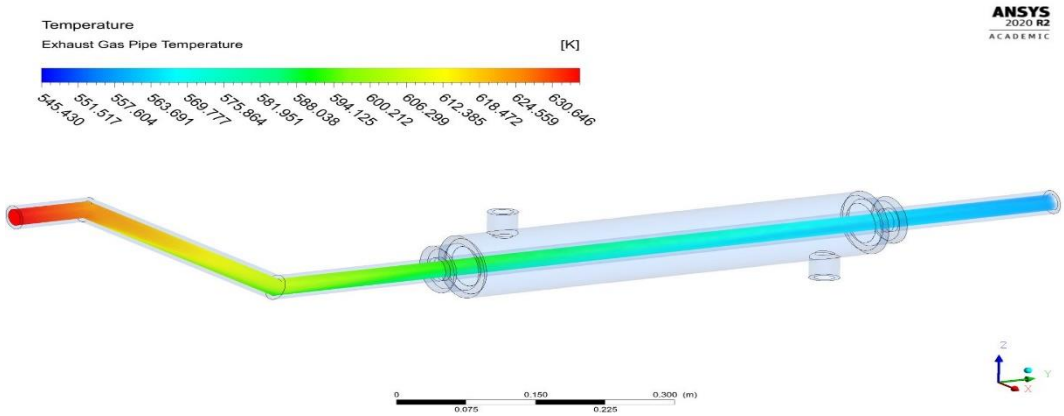

Figure 9: Exhaust Gas Pipe Temperature

3.1.4.Exhaust Gas Velocity:

The following figure shows the velocity distribution of exhaust gases through the exhaust pipe. The velocity ranges from $38.456\ m/s$ to$16.573\ m/s$. The boundary condition applied for velocity distribution is inlet velocity$29\ m/s$. The maximum and minimum

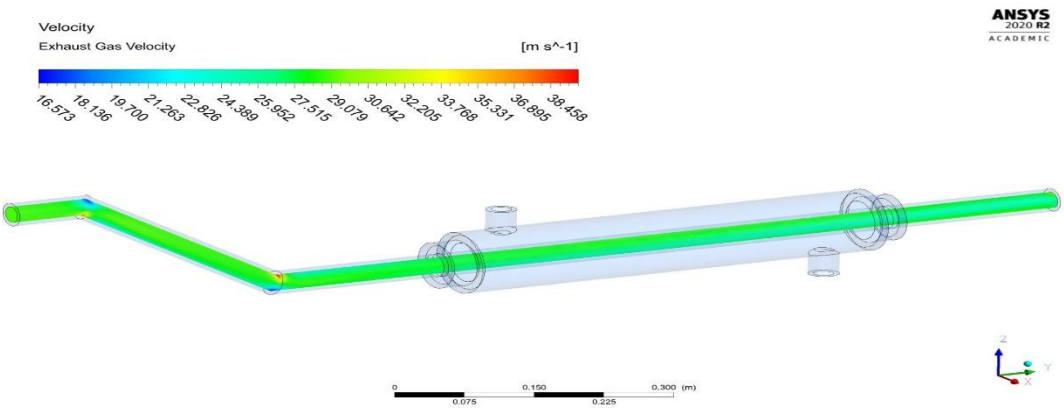

velocities are observed at corners due to flow disturbance that happened because of vortex generation.

Figure 10: Exhaust gas Velocity

3.1.5. Total Temperature Distribution:

The following figure shows the total temperature distribution through the exhaust pipe. The temperature ranges from $618.166K$ to$300.00K$. The maximum temperature is observed at the inlet side of an exhaust pipe and the minimum temperature is at the outlet side of an exhaust pipe.

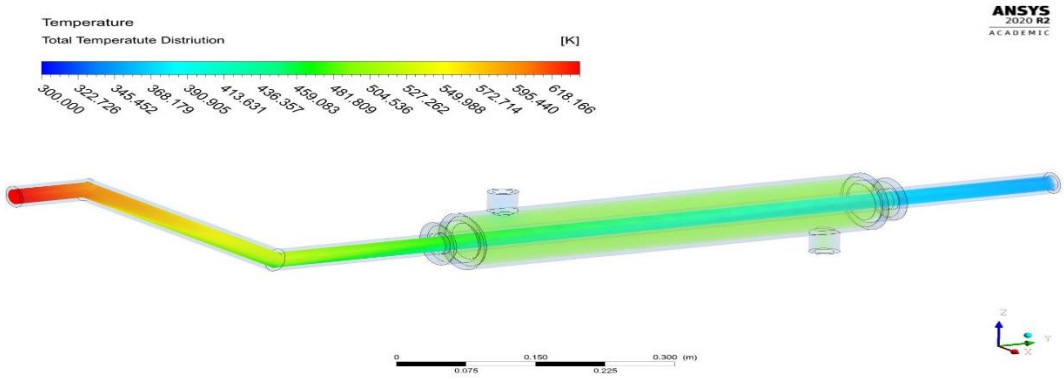

Figure 11: Total temperature Distribution

3.2. Discussion:

Generally, an IC Engine acts as an air pump that means a good breathing system is very important to perform better. The breathing system referred to the exhaust and intake of the IC Engine. The factors of the exhaust system that affects the performance of IC Engine are explained below; [2]

3.2.1. Exhaust gas velocity:

It is recommended to have higher exhaust gas velocity so that it removes exhaust gases more quickly to the atmosphere and also provides better scavenging when inlet and exhaust valves are overlapped. So, the higher the exhaust gas velocity higher the performance of the IC Engine. Using an exhaust system with a smaller diameter can help the exhaust gas to attend higher speed than that of an exhaust system with a larger diameter. The engine used in this research is having $29m/s$, which is quite low so the modification in the diameter of the exhaust pipe should be implemented to increase the performance of the existing IC Engine.

3.2.2. Exhaust Back Pressure:

The backpressure in the exhaust system can act as resistance to the flow of exhaust gases to the atmosphere. So it is not recommended to have a very small exhaust pipe diameter which can increase the backpressure. An increase in the back pressure can consume more piston

power to release the exhaust gases into the atmosphere. It is also difficult for the exhaust system with a smaller exhaust pipe diameter to handle a large volume of exhaust gases when the engine is at high speed. This ultimately increases the back pressure on the engine side which can adversely affect the performance of the IC Engine. The diameter of the exhaust pipe used in this research is $38.1mm$ $(1.5inch)$ and exhaust gas pressure is $2.65\ bar$ $(265000Pa)$ which is very low. Due to the low exhaust gas pressure, it requires more piston work to eliminate exhaust gases in the atmosphere. Hence the performance of IC Engine is very low for Bio-CNG fuelled engine than that of Diesel fuelled engine.

3.2.3.Exhaust gas Velocity and Exhaust Capacity:

It is recommended to have an exhaust piping system that does not scarifies the velocity of exhaust gases for the sake of discharge capacity and vice versa. Increasing the pipe diameter can reduce the velocity of exhaust gas but increases the discharge capacity of the system, so finding the optimum balance between discharge velocity and capacity is key for better engine performance.

4.Conclusion

The computational fluid dynamics analysis shows that the pressure and velocity are maximum at the corners of the exhaust pipe due to the vortex formation. Also, the pressure and velocity of exhaust gases are low which consumes more power of piston for scavenging of exhaust gases to the atmosphere. This leads to the reduction of performance of IC Engines working on Bio-CNG fuel. The changes in diameter and length of exhaust pipe can significantly improve the performance of Bio-CNG fuelled engine. The temperature of exhaust gases observed in the Bio-CNG fuelled engine are very high than the diesel-fuelled engine which shows that there is the scope of heat recovery for air preheating and Turbo/Super Charging of IC Engine.

5.References

5.1. Document:

[1] Sanjiv Raj, 'How does the exhaust system affect car performance_ - Quora.html'. https://www.quora.com/How-does-the-exhaust-system-affect-car-performance (accessed Dec. 20, 2020).

5.2. Blog Post:

[2] Sanjiv Raj, 'How does the exhaust system affect car performance_ - Quora.html'. https://www.quora.com/How-does-the-exhaust-system-affect-car-performance (accessed Dec. 20, 2020).