Mental Health Advisor using

Deep Learning Model

Manmohan Rathi[1] Yogesh Sharma[2] Vrushika Shirshat[3] Prof. Prajakta Khaire[4]

[1, 2, 3, 4]Department of Information Technology, Shivajirao S. Jondhale College ofEngineering, Dombivli.

[1]mandy311.rathi@gmail.com
[2]yogeshsharma00777@gmail.com [3]
vrushikas142@gmail.com
[4] khairepp@gmail.com

Abstract: *In a human body, there are two main types of health factors. First is the physiological or physical health while the other is mental health. Mental health is not just the physical health of the brain, it includes many other factors. Emotions, stress, anxiety are some of the causes that can affect mental health. For a long time, medical science considered mental and physiological health as two separate things but recently more and more evidence say that both are deeply interlinked and mental health can have profound effect on the physiological health. Deep learning is a sub set of Machine learning. Deep learning can be used to make models that train on given data and then run to do automated tasks. Deep learning is used in tasks that has to work with a lot of data like audio recognition, video analyses, etc. AI uses many Deep learning concepts to add accuracy to the machines. Deep learning programs first need to be coded for their basic structure and then fed the data they are supposed to train on. They then train on that data and once trained, create a model which is then capable of doing the task automatically.*
Unlike Machine Learning, Deep Learning is capable of handling large amount of data. It can not only train on large amount of data but can also take large input and store it while processing. It is for this precise reason that we decided to use Deep Learning for our Mental Health Advisor Chat bot project as it will be able to remember and process the long queries given by the user and give an appropriate output.

Keywords: *Mental Health; Deep Learning; LSTM; Therapist; Neural Network*

1. INTRODUCTION

Mental health is not just the physical health of the brain, it includes many other factors. Emotions, stress, anxiety are some of the causes that can affect mental health. For a long time, medical science considered mental and physiological health as two separate things but recently more and more evidence say that both are deeply interlinked and mental health can have profound effect on the physiological health. There are many diseases which have

a faster recovery rate if the person is in a good and positive mental state.

Good mental health doesn't only avoid many diseases but also other things. Good mental state helps people to form and maintain better interpersonal relationships. Our society views it as a taboo topic which is a shame as it then becomes the reason for suicidal tendencies or depressed moods. Suppressed trauma, post-traumatic stress disorders (PTSD), amnesia are some of the Mental Health diseases. Therapy sessions or seeing a psychologist often help identify and cure such and other problems.

The treatment for mental health is a bit different than the physical one. Here, one on one sessions are held between the therapist and the patient who tries to help the patient find out the reason for his/her problems and the ways to deal with them. Medication is also used depending on the problem, usually only problems with a certain level of seriousness are suggested medications. Our Mental health advisor will help reduce minor issue before they grow into something big. It will also try to analyze the reason behind the issues.

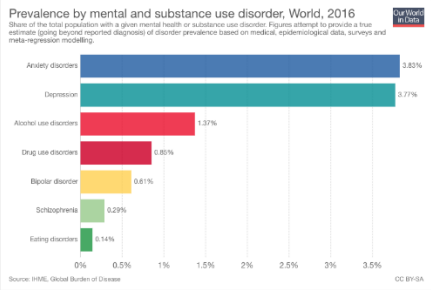

Problem Definition

A huge part of the society doesn't treat mental health as a usual thing and also the costs for visiting a therapist or psychologist can be quite high to pay for minor issues. Our Mental heath advisor will help with those issues or we can say can act as a personal therapist to some extent. It will be trained on data from psychology research or therapist data which will enable it to provide practical solutions to the problems it will diagnose after analyzing the input of the user.

2. Literature Survey

Paper Name	Publisher by	Publishing Time	Abstract
Long Short-Term Memory Networks for Automatic Generation of Conversations	Tomohiro Fujita Wenjun Bai Changqin Quan	2017	Human Machine Interface demands the communicative propriety that would be applied in various linguistic tasks. In this research, we develop an intelligent 'chat bot', which generates conversational sentences via recurrent neural network and its coupled memory unit, long short-term memory (LSTM). Word strings in conversations are considered as time series data. Using a single neural network model that performs a simple task of outputting the next word from the preceding word, a conversational sentence can be generated by connecting the words. In the experiment, we performed the linguistic 'Turning Test' to evaluate the proposed system.
Neural-network based Chat Bot	Milla T Mutiwokuziva Melody W Chanda Prudence Kadebu Addlight Mukwazvure Tatenda T Gotora	2017	In this paper, we explore the avenues of teaching computers to process natural language text by developing a chat bot. We take an experiential approach from a beginner level of understanding, in trying to appreciate the processes, techniques, the power and possibilities of natural language processing using recurrent neural networks (RNN). To achieve this, we kick started our experiment by implementing sequence to sequence long short-term memory cell neural network (LSTM) in conjunction with Google word2vec. Our results show the relationship between the number of training

			times and the quality of language model used for training our model bot affect the quality of its prediction output. Furthermore, they demonstrate reasoning and generative capabilities or RNN based chat bot
Toward a proposed framework for mood recognition using LSTM Recurrent Neuron Network	Huu Son Hoang	2017	A effective analysis plays an important role in understanding human characteristics, predicting human behaviour and diagnosing mental health problems. Although a large number of affective recognition researches have been published, predicting mood - the long-lasting affect from real life context is still a challenge because of the complexity of correlations between mood and daily factors. We therefore aim at developing a framework for predicting mood considering several aspects on human and environment adaption. The framework consists of two components: a data acquisition tool designed for wearable devices and a mood model based on Long Short-Term Memory Recurrent Neuron Network (LSTM-RNN). In this paper, we are focused on presenting the later component to apply LSTM RNN for mood prediction in daily life
Sentiment analysis using deep learning architectures	Ashima Yadav Dinesh Kumar Vishwakarma	2019	ocial media is a powerful source of communication among people to share their sentiments in the form of opinions and views about any topic or article, which results in an enormous amount of unstructured information. Business organizations need to process

			and study these sentiments to investigate data and to gain business insights. Hence, to analyse these sentiments, various machine learning, and natural language processing-based approaches have been used in the past. However, deep learning-based methods are becoming very popular due to their high performance in recent times. This paper provides a detailed survey of popular deep learning models that are increasingly applied in sentiment analysis. We present a taxonomy of sentiment analysis and discuss the implications of popular deep learning architectures. The key contributions of various researchers are highlighted with the prime focus on deep learning approaches. The crucial sentiment analysis tasks are presented, and multiple languages are identified on which sentiment analysis is done.
EEG signal classification using LSTM and improved neural network algorithms	P. Nagabushanam S. Thomas George S. Radha	2019	Neural network (NN) finds role in variety of applications due to combined effect of feature extraction and classification availability in deep learning algorithms. In this paper, we have chosen SVM, logistic regression machine learning algorithms and NN for EEG signal classification. Two-layer LSTM and four-layer improved NN deep learning algorithms are proposed to improve the performance in EEG classification. Novelty lies in one-dimensional gradient descent activation functions

			with radial basis operations used in the initial layers of improved NN which help in achieving better performance. Statistical features namely mean, standard deviation, kurtosis and skewness are extracted for input EEG collected from Bonn database and then applied for various classification techniques. Accuracy, precision, recall and F1 score are the performance metrics used for analysing the algorithms. Improved NN and LSTM give better performance compared to all other architectures. The simulations are carried out with variety of activation functions, optimizers and loss models to analyse the performance using Python in keras.
LSTM-based Emotional 3D Avatar	Yu-Ting Wan Cheng-Chun Chiu Kai-Wen Liang Pao-Chi Chang	2019	In this work, we developed a new model of chat robot with facial expression interaction. Different from the voice assistant that only interacts with text and voice, we let the chat robot interact with the user with a specific role play. A text sentiment-analysis network is added to this system to recognize the emotion of the response sentences. Moreover, we created a 3D-constructed anime character “Midoriko” to have the image of the chat robot more vivid. Our goal is to provide better experience to users. The technical parts of this work is based on neural network techniques.

3. Conceptual Overview of the Project

In a Neural Network, each neuron receives a set of x-values (numbered from 1 to n) as an input and compute the predicted y-hat value as shown in figure 2. Vector x contains the values of the features in one of m examples from the training set. Each of units has its own set of parameters, usually referred to as w (column vector of weights) and b (bias) which changes during the learning process. In each iteration, the neuron calculates a weighted average of the

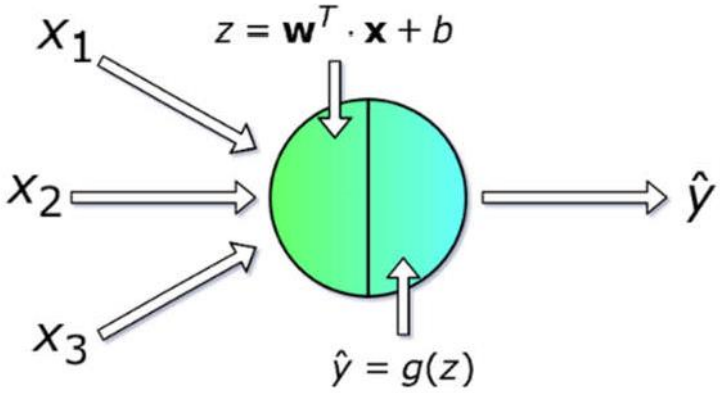

values of the vector x, based on its current weight vector w and adds bias. Finally, the result of this calculation is passed through a non-linear activation function g. [5]

Figure 2. Single Neuron

$$z = w_1x_1 + w_2x_2 + w_3x_3 + \ldots + w_nx_n = \mathbf{w}^T \cdot \mathbf{x}$$

3.1 Long Short Term Memory (LSTM)

Long short-term memory (LSTM) is an artificial recurrent neural network (RNN) architecture used in the field of deep learning. Unlike standard feed forward neural networks, LSTM has feedback connections. It can not only process single data points (such as images), but also entire sequences of data (such as speech or video). For example, LSTM is applicable to tasks such as unsegment, connected handwriting recognition, speech recognition and anomaly detection in network traffic or IDSs (intrusion detection systems). LSTM networks are well-suited to classifying, processing and making predictions based on time series data, since there can be lags of unknown duration between important events in a time series. LSTMs were developed to deal with the vanishing gradient problem that can be encountered when training traditional RNNs. Relative insensitivity to gap length is an advantage of LSTM over RNNs and other sequence learning methods in numerous applications.

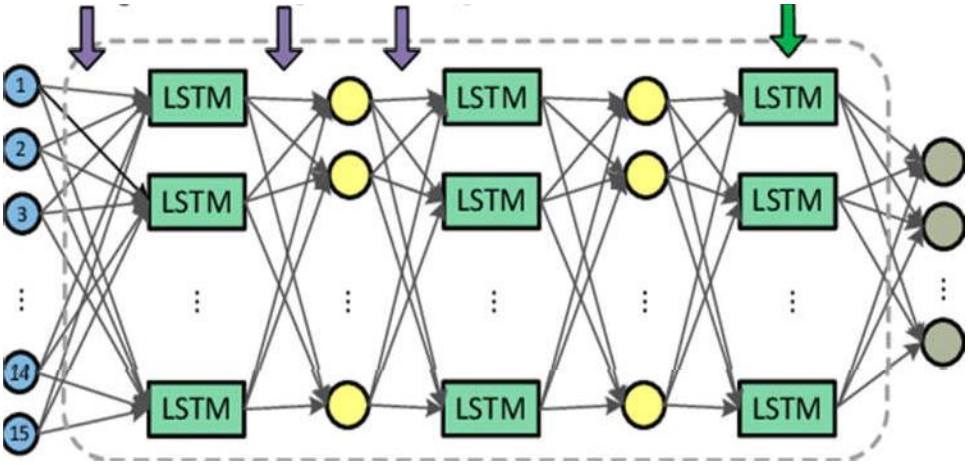

Figure 3. LSTM Network

3.2 Working of LSTM

In LSTM, every cell has three major gates which work together which enables the algorithm to remember data for long periods of time and to discard the data which is unnecessary. The gates are as follows:

1. **Cell Gate :**

   Ct = ft *Ct-1 + it *ct

2. **Forget Gate:**

   ft = s(Wf.[h(t-1),xt] + bf)

3. **Remember Gate:**

   it = s(Wi.[h(t-1),xt] + bi)

   ct = tanh(Wc.[h(t-1),xt] + bc)

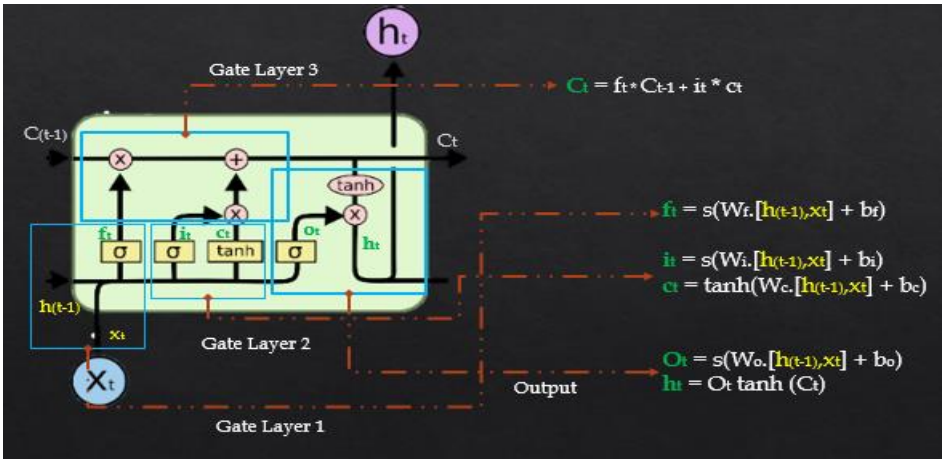

Figure 4. A cell of a LSTM Algorithm

3.3 Decision Tree Algorithm

Decision Tree Algorithm is a supervised Machine Learning Algorithm where data is continuously divided at each row based on certain rules until the final outcome is generated. Let's take an example, suppose you open a shopping mall and of course, you would want it to grow in business with time. So for that matter, you would require returning customers plus new customers in your mall. For this, you would prepare different business and marketing strategies such as sending emails to potential customers; create offers and deals, targeting new customers, etc. But how do we know who are the potential customers? In other words, how do we classify the category of the customers? Like some customers will visit once in a week and others would like to visit once or twice in a month, or some will visit in a quarter. So decision trees are one such classification algorithm that will classify the results into groups until no more similarity is left.

3.4 Discord – UI Interface

Discord is a VoIP, instant messaging and digital distribution platform designed for creating communities. Users communicate with voice calls, video calls, text messaging, media and files in private chats or as part of communities called "servers".[note 1] Servers are a collection of persistent chat rooms and voice chat channels. Discord runs on Windows, macOS, Android, iOS, iPadOS, Linux, and in web browsers. As of July 21, 2019, there are over 250 million users of the software

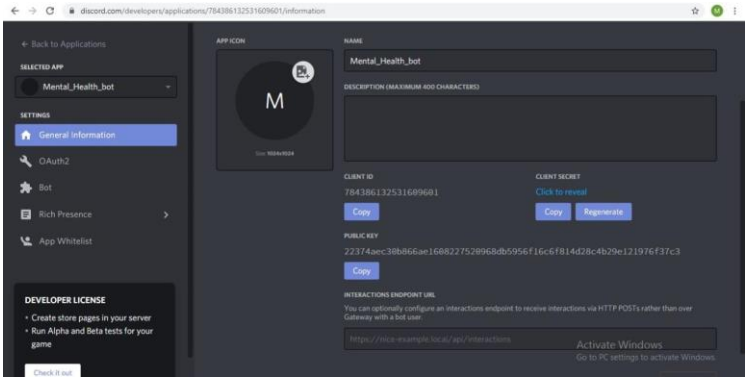

Figure 5. Discord Developer Interface

4. Results

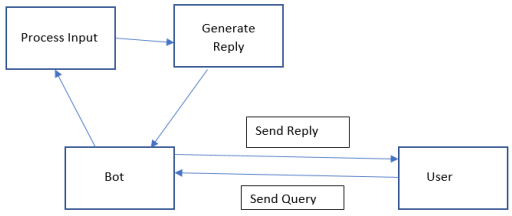

As we can see in figure 6, The Mental health bot gives two output when asked questions about mental health problem. The first is the analysis about ‘What problem does the user has’ and the other output is the suggestion given to the user by the Bot to improve its mental health.

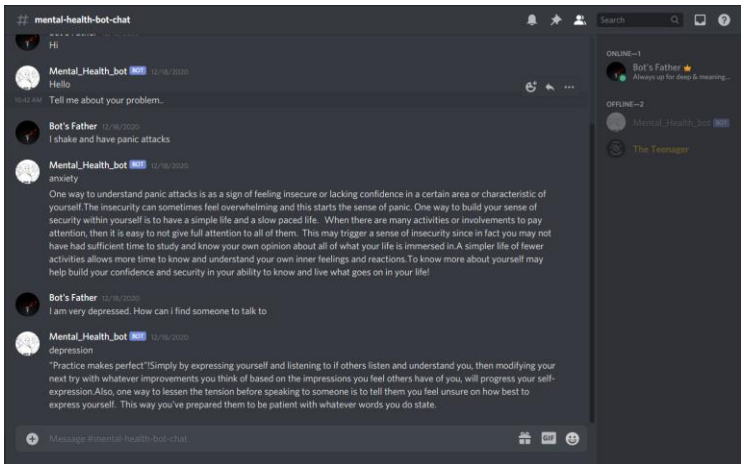

Figure 6. Output on Discord

5. Conclusion

After studying different research papers, we have seen many types of algorithms, techniques and strategies like Feed Forward, Recurrent Neural Networks, etc used to design chat bot which works just fine with no problems but the kind of bot we are going to development are not a lot out there and some have certain drawbacks which we will rectify and build a system based on Long Short Term Memory (LSTM). While studying different research paper we also came across some model which takes the sentimental trends into consideration and gives the expected and accurate result but the model does nothing ahead of that, we will take those reply and give the user some response for their help. Our model will analyze the sentences to compute and generate the output which will help the user get through the situation.

6. Acknowledgement

With due respect and gratitude we take the opportunity to thank all those who helped us directly and indirectly.We feel pleasure in expressing our Heartfelt gratitude and vote of thanks to our guide Prof. Prajkta Khaire, who guided us in difficult situations. We would also like to thank our respected Head of Department Dr. Savita Sangam for providing unlimited access to all possible resources and encouragement.

REFERENCES

[1] *Long Short-Term Memory Networks for Automatic Generation of Conversations Tomohiro Fujita Wenjun Bai Changqin Quan Department of Computational Science, Graduate School of System Informatics, Kobe University, Kobe, Japan*

[2] *A Neural-network based Chat Bot, Milla T Mutiwokuziva, Melody W Chanda, Prudence Kadebu, Addlight Mukwazvure, Tatenda T Gotora, Software Engineering Department, ASET, Harare Institute of Technology Amity Univeristy Gurgaon*

[3] *Sentiment analysis using deep learning architectures: a review, Ashima Yadav1 · Dinesh Kumar Vishwakarma*

[4] *EEG signal classification using LSTM and improved neural network algorithms P. Nagabushanam, S. Thomas George , S.. Radha*

[5] *https://towardsdatascience.com/https-medium-com-piotr-skalski92-deep-dive-into-deep- networks-math-17660bc376ba*

[6] *Midoriko Chatbot: LSTM-based Emotional 3D Avatar Yu-Ting Wan, Cheng-Chun Chiu, Kai-Wen Liang, and Pao-Chi Chang Department of Communication Engineering National Central University Taoyuan City, Taiwan*

[7] *A CNN–RNN–LSTM Based Amalgamation for Alzheimer's Disease Detection Mohit Dua, Drishti Makhija, P. Y. L. Manasa, Prashant Mishra.*

[8] *Understanding LSTM Networks -- colah's blog*