DESIGN OF A HYBRID PID PLUS FUZZY CONTROLLER FOR INNER LOOP AND OUTER LOOP SPEED CONTROL OF DC MOTOR

[1]Mr. Himanshu.B. Parmar
[1]P.G. Scholar,
I.C Department
LDCE, Ahmedabad, Gujarat, India

[2] Prof. (Dr.) Tejas V. Shah,
I.C Department
LDCE, Ahmedabad, Gujarat, India

Abstract

This paperwork is based on a hybrid PID plus fuzzy controller for inner loop and outer loop speed control of DC motor. The DC motors have a wide range of applications such as in battery-operated vehicles, wheelchairs, automotive fuel pumps, machine tools, robotics, aerospace, and other various industrial applications because of their superior electrical and mechanical characteristics. DC motors have a large application area because of their robustness, speed, and good load characteristics. Most of the application requires efficient speed control of DC motor. Here performance analysis of inner loop and outer loop speed control of DC motor using hybrid PID controller and Fuzzy logic controller is carried out using MATLAB/SIMULINK. Using fuzzy, sensitiveness to variation of input torque and also any kind of system uncertainty can be overcome compared to all other conventional controllers. In the hardware portion, we design Hybrid PID AND FUZZY controller programming in Arduino software and networking with the design of dc motor speed control PCB. After networking we measuring and controlling the DC motors' speed.

Keywords—PID, DC Motor, Fuzzy, Hybrid, etc.

I. INTRODUCTION

Over the past decade, the DC machine has gained high popularity in the industry, especially where high performance is required owing to higher efficiency, adjustable speed control, etc. the DC motors have variable characteristics and are used extensively in variable speed drives. The DC motors are used to provide frequent starting, good speed regulation, braking, and reversing. The speed control methods of DC motors are very simpler and less complex than the AC motors. The DC motors play a significant role in modern industrial drives. With recent advancements in power conversions, control techniques, and microcomputers, AC motor drives are becoming highly competitive with DC motor drives.

Although the future trend is toward DC drives, the AC drives completely replaced by DC drives. To convert the fixed AC voltage to variable DC voltage, the controlled rectifiers are used. Where to convert the fixed DC voltage to variable DC voltage the choppers are used. The controlled rectifiers and choppers are widely used for the speed control of DC motors. Both series and separately excited DC motors are normally used in variable speed drives.

DC Motor Speed Control Overview

In the last three decades, FLC has evolved as an alternative or complementary to the conventional control strategies in various engineering areas. Fuzzy control theory usually provides non-linear controllers that are capable of performing different complex non-linear control actions, even for uncertain nonlinear systems. Unlike conventional control, designing an FLC does not require precise knowledge of the system model such as the poles and zeroes of the system transfer functions. Imitating the way of human learning, the tracking error, and the rate of the error are two crucial inputs for the design of such a fuzzy control system.

Despite a lot of research and the huge number of different solutions proposed, most industrial control systems are based on conventional PID (Proportional-Integral-Derivative) regulators. Different sources estimate the share taken by PID controllers is between 90% and 99%. Some of the reasons for this situation may be given as follows:

1. PID controllers are robust and simple to design.
2. There exists a clear relationship between PID and system response parameters. As a PID controller has only three parameters, plant operators have a piece of deep knowledge about the influence of these parameters and the specified response characteristics on each other.
3. Many PID tuning techniques have been elaborated during recent decades, which facilities the operator's task.

4. Because of its flexibility, PID control could benefit from the advances in technology.

Most of the classical industrial controllers have been provided with special procedures to automate the adjustment of their parameters (tuning and self-tuning). However, PID controllers cannot provide a general solution to all control problems. The processes involved are in general complex and time-variant, with delays and non-linearity, and often with poorly defined dynamics. When the process becomes too complex to be described by analytical models, it is unlikely to be efficiently controlled by conventional approaches. In this case, a classical control methodology can in many cases simplify the plant model but does not provide good performance. Therefore, an operator is still needed to have control over the plant. Human control is vulnerable and very dependent on an operator's experience and qualification, and as a result, many PID controllers are poorly tuned in practice. A quite obvious way to automate the operator's task is to employ an artificial intelligence technique.

Fuzzy control, occupying the boundary line between artificial intelligence and control engineering, can be considered as an obvious solution, which is confirmed by engineering practice. According to the survey of the Japanese control technology industry conducted by the Japanese Society of Instrument and Control Engineering, fuzzy and neural control constitute one of the fastest-growing areas of control technology development and have even better prospects for the future. Because PID controllers are often not properly tuned (e.g., due to plant parameter variations or operating condition changed), there is a significant need to develop methods for the automatic tuning of PID controllers. While there exist many conventional methods for the automatic tuning of PID controllers, including hand-tuning, Ziegler-Nichols tuning, analytical method, by optimization or, pole placement. If a mathematical model of the plant can be derived, then it is possible to apply various design techniques for determining parameters of the controller that will meet the transient and steady-state specification, of the closed-loop system. However, if the plant is so complicated that its mathematical model cannot be easily obtained, then an analytical approach to the design of a PID controller is not possible. Then we must resort to experimental approaches to tuning the PID controller.

II. RESEARCH OBJECTIVES

RESEARCH PROBLEMS

- DC Motor Speed Control
- Inner and Outer Loop Control
- Torque-Speed Variation Control
- Performance Enhancement
- Controller limitations for parameters control

OBJECTIVES

- DC Motor Working and Parameters Control
- PID and Fuzzy logic based Hybrid Controller operation
- Performance Comparison of DC Motor Speed Control
- Output Parameters regulation of motor using Hybrid Controller concept.

Because of fuzzy logic merits, this paper proposes three types of fuzzy logic controllers for DC motor drive using an advanced simulation model and presents a comparative study of performance specifications of classical PI and PID controllers and three fuzzy logic controllers. The three fuzzy logic controllers considered are PI-like fuzzy logic controller (PID-Like FLC), Hybrid fuzzy logic controller (HFLC), and integrated fuzzy logic controller (IFLC). The steady-state and dynamic characteristics of speed and torque are effectively monitored and analyzed using the proposed model.

Fuzzy logic controllers aim to obtain improved performance in terms of disturbance rejection or parameter variation than obtained using classical controllers. In the HFLC, the proportional term of the traditional PID controller is replaced with an incremental fuzzy logic controller. For the PID-Like FLC, the output of the controller is modified by a rule base with the error and change of error of the controlled variable as the inputs.

MODELING OF SEPARATELY EXCITED DC MOTOR

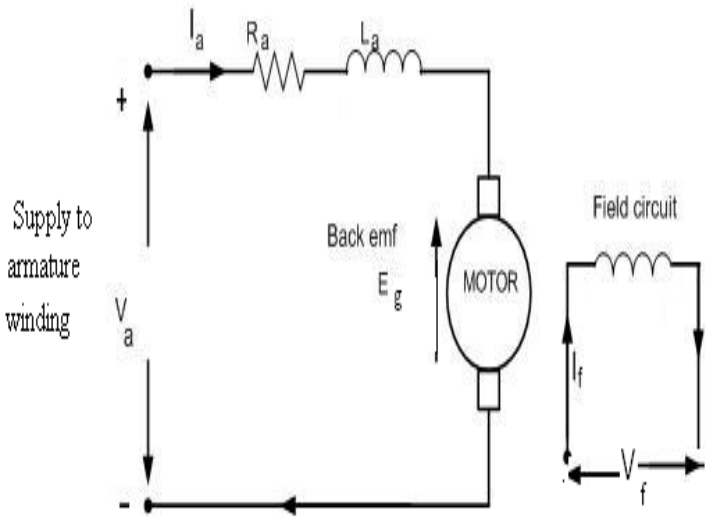

Figure-1 Separately Excited DC motor model

The armature equation is shown below:
Va =Eg+ IaRa+ La (dIa/dt)

The description for the notations used is given below:

1. Va is the armature voltage in volts.
2. For Eg is the motor back emf in volts.
3. Ia is the armature current in amperes.
4. Ra is the armature resistance in ohms.
5. La is the armature inductance in Henry.

Now the torque equation will be given by:
Td = Jdω/dt +Bω+TL
Where:

1. TL is load torque in Nm.
2. Td is the torque developed in Nm.
3. J is the moment of inertia in kg/m².
4. B is the friction coefficient of the motor.
5. ω is the angular velocity in rad/sec.

Assuming absence (negligible) of friction in the rotor of the motor, it will yield:
B=0
Therefore, new torque equation will be given by:
Td = Jdω/dt + TL --------- (i)
Taking field flux as Φ and (Back EMF Constant) Kv as K. Equation for back emf of the motor will be:

Eg = K Φ ω --------- (ii)
Also, Td = K Φ Ia --------- (iii)
From the motor's basic armature equation, after taking Laplace Transform on both sides, we will get:

Ia(S) = (Va – Eg)/(Ra + LaS)

Now, taking equation (ii) into consideration,
We have: => Ia(s) = (Va – KΦω)/ Ra(1+ LaS/Ra)
And, ω(s) = (Td - TL)/JS = (KΦIa - TL) /JS
Also, The armature time constant will be given by (Armature Time Constant) Ta = La/Ra

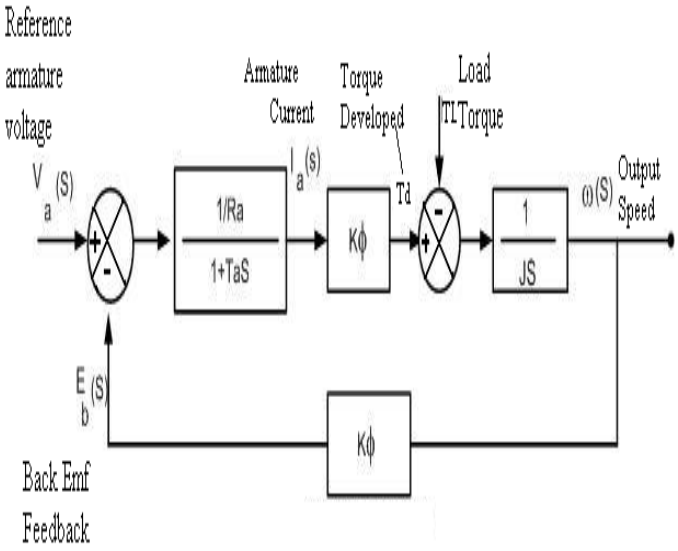

Figure-2 Block Model of Separately Excited DC Motor

After simplifying the above motor model, the overall transfer function will be as given below: ω (s) / Va(s) = [KΦ /Ra] /JS(1+TaS) /[1 +(K²Φ² /Ra) /JS(1+TaS)]

Further simplifying the above transfer function will yield:
ω(s) /Va(s) = (1 /kΦ) /{ 1 +(k²Φ² /Ra) /JS(1+TaS)} ---------- (iv)

Assuming,
Tm = JRa / (kΦ) ² as electromechanical time constant.

Then the above transfer function can be written as below:
ω(s)/Va(s) = (1/kΦ)/ [STm (1+STa)+1] --------(v)

Let us assume that during starting of motor, load torque TL = 0 and applying full voltage Va Also assuming negligible armature inductance, the basic armature equation can be written as:

Va = KΦω(t) + IaRa

At the same time Torque equation will be:
Td = Jdω/dt = KΦIa ----- (vi)

Putting the value of Ia in the above armature equation:

Va=KΦω(t)+(Jdω/dt)Ra/ KΦ

Dividing into both sides by

KΦ, Va/KΦ=ω(t)+JRa(dω/dt)/(KΦ)² ----------(vii)
Va/KΦ is the value of motor speed under no-load condition.

Therefore,
ω(no load)=ω(t)+JRa(dω/dt)/(KΦ)² = ω (t) + Tm (dω/dt)

Where,
KΦ = Km(say) And,
Tm=JRa/(KΦ)²=JRa/(Km)²

Therefore,
J = Tm (Km) ²/ Ra --------- (viii)

From motor torque equation, we have:
ω(s) = KmIa(s)/JS - TL/JS -------- (ix)

From equation (viii) and (ix), we have:
ω(s) = [(Ra / Km) Ia(s) - TL Ra / (Km) ²] (1/Tm(s))

Now, Replacing KΦ by Km in equation (v), we will get:
ω(s)/Va(s)=(1/Km) / (1+STm+S²TaTm) ---------- (x)

Since the armature time constant Ta is much less than the electromechanical time constant Tm, (Ta << Tm)

Simplifying, $1 + STm + S^2TaTm \approx 1 + S(Ta+Tm) + S^2TaTm = (1 + STm)(1 + STa)$

The largest time constant will play the main role in delaying the system when the transfer function is in time constant form. To compensate for that delay due to the largest time constant we can use the PI controller as a speed controller.

It is because the zero of the PI controller can be chosen in such a way that this large delay can be canceled. In the Control system term a time delay generally corresponds to a lag and zero means a lead, so the PI controller will try to compensate the whole system. Hence, the equation can be written as:

$\omega(s)/Va(s) = (1/Km)/((1 + STm)(1 + STa))$ -----(xi)

Tm and Ta are the time constants of the above system transfer function which will determine the response of the system. Hence the dc motor can be replaced by the transfer function obtained in equation (xi) in the DC drive model shown earlier.

Speed Control of SE D.C Motor

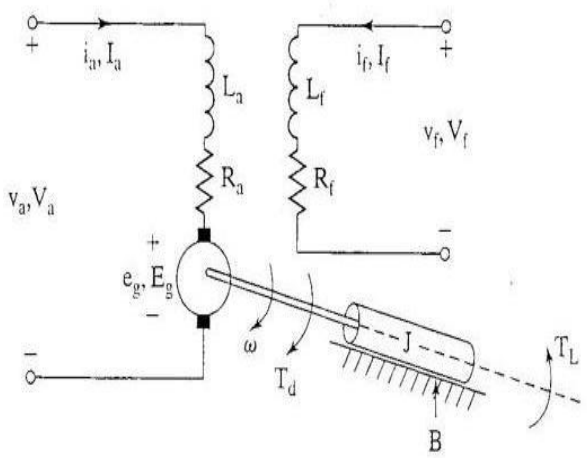

Fig.3 Equivalent circuit diagram of separately excited dc motor

Separately excited DC motor consists of field and armature winding with separate supply. The equivalent circuit diagram of separately excited DC motor is shown in fig. 3. When a separately excited DC motor is excited by a field current of If and an armature current of Ia flows in the armature circuit. The back emf and torque will develop in the motor and that torque is used to balance the load torque at a particular speed.

Both the currents that are armature current Ia and field current If are independent in separately excited DC motor. The field current is normally much lesser than the armature current. Hence, by the mathematical analysis, the speed of the separately excited DC motor can be varied by:-

1. Controlling the armature voltage, known as voltage control.
2. Controlling the field current, known as field control.
3. Torque demand, which corresponds to an armature current, Ia, for a fixed field current If

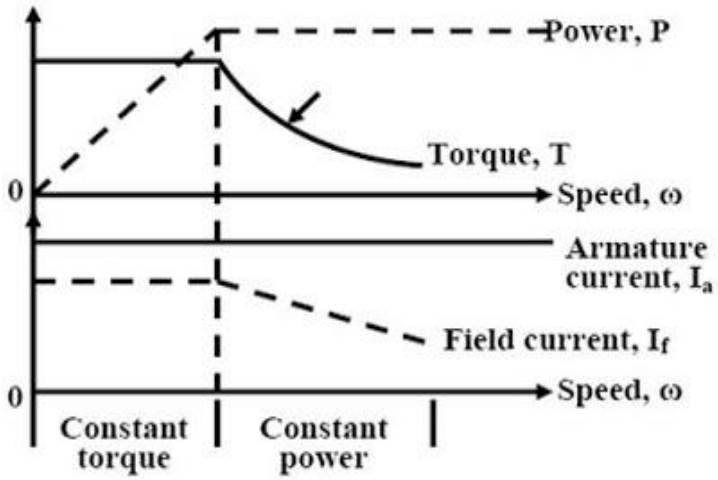

Fig. 4 Characteristic diagram

The speed which corresponds to the rated armature voltage rated field current and rated armature current is called base speed. In practice, for a speed of the motor less than the base speed, the armature current, and field current are kept constant to meet the torque demand and the armature voltageVa is varied to control the speed. For the speed of the motor higher than the base speed, the armature voltage is maintained at the rated value and the field current is varied to control the speed. However, the power developed by the motor (=torque*speed) remains constant. Fig.4. shows the characteristics of power, torque, armature current, and field current against the speed.

The speed of DC motors changes with the load torque. To maintain a constant speed, the armature (and or field) voltage should be varied continuously by varying the delay angle of ac-dc converters or duty cycle of dc choppers. In a practical drive system, it is required to operate the drive at a constant torque or constant power, in addition, controlled acceleration and deceleration are required. Most industrial drives operate as closed-loop feedback systems. A closed-loop control system has the advantage of improved accuracy, fast dynamic response, and reduced effects of load disturbances and system non-linearity.

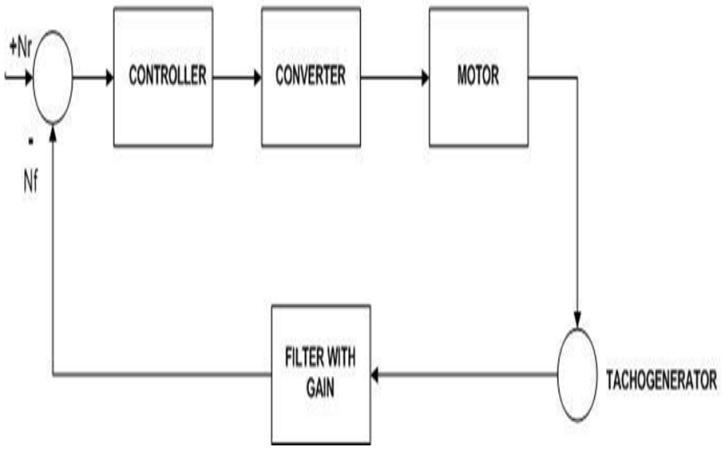

Fig.5 Block diagram of the closed-loop model for speed control dc motor

The block diagram of the closed-loop converter model fed separately excited dc drive is shown in fig. 5. The basic principle of dc motor speed control is that keeping field voltage constant, the output speed of dc motor can be varied by controlling armature voltage the speed is controlled for below and up to rated speed. When the output speed of the motor is compared with the reference speed, their error will be generated. That error signal is fed to the speed controller. If any difference occurred in the reference speed and the feedback speed, the controller output will vary. The output of the speed controller i.e. control voltage Eg fed to the converter and that controls the operating duty cycle of the converter. In this paper, the chopper is used as a converter. The converter output generates the required voltage V to bring the motor speed back to the specified speed. Tacho-generator is used to measure the output speed of the motor. The generated tacho voltage from tacho-generators contains some ripple and it will not be a perfect dc. Hence using a filter with gain to bring tacho output back to controller level.

The controller used in a closed-loop model of the dc motor is to control the speed of the dc motor as per desired setpoint values which are set in the look-up table. There is more number controllers are available and its selection process is also an important role. The proportional controller, on-off controller, derivative controller, integral controller, and PID controller, etc are the most commonly used controllers in the control system. But PI controller is the some of better than the other controllers. Why because in the PI controller the fast correction is done by proportional term and the integral term takes a finite time to act and makes the steady-state zero. Hence the better suitable controller for speed control is the PI type controller.

MODELLING AND SIMULATION

DESCRIPTION OF PID CONTROL BASED DC MOTOR

The block diagram is shown in fig.6 a chopper-fed- DC motor drive in the MATLAB simulation. A DC motor is fed by a DC source through a chopper, which consists of a GTO thyristor and a freewheeling diode. The GTO and diode are simulated with the universal bridge block where the number of arms has been set to 1 and the specified power electronic device is GTO/Diode. Each switch on the block icon represents a GTO/ant parallel diode pair. Pulses are sent to the top GTO1 only. No pulses are sent to the bottom GTO2. Therefore Diode2 will act as a freewheeling diode the advantage of using the universal bridge block is that it can be discretized and allows faster simulation speeds than with an individual GTO and Diode. Also, when a purely resistive snubber is used, the commutation from GTO to Diode is instantaneous, and cleaner wave shapes are obtained for voltage Va. The motor drives a mechanical load characterized by inertia J, friction coefficient B, and load torque TL.

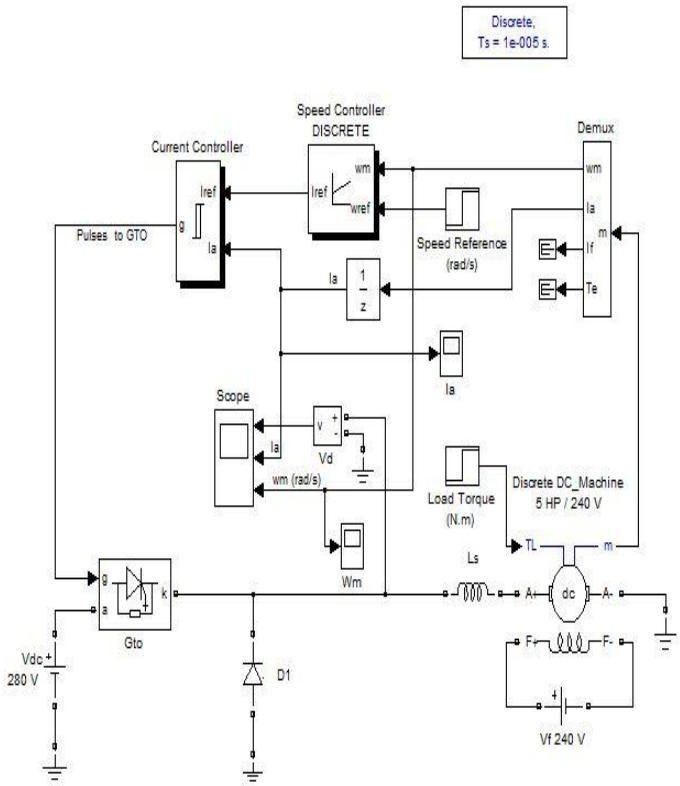

Fig.6: Simulation diagram for chopper fed-DC motor drive

Simulation Results

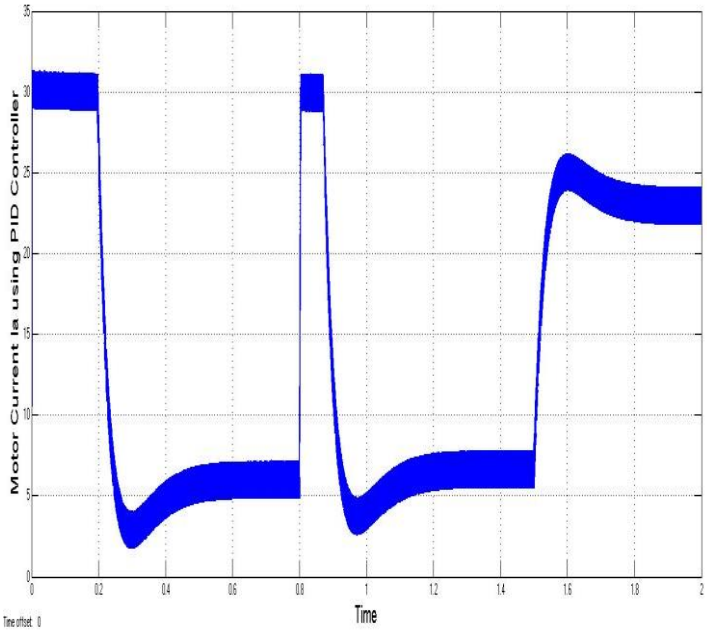

Fig 7- Motor current Ia using conventional PID controller

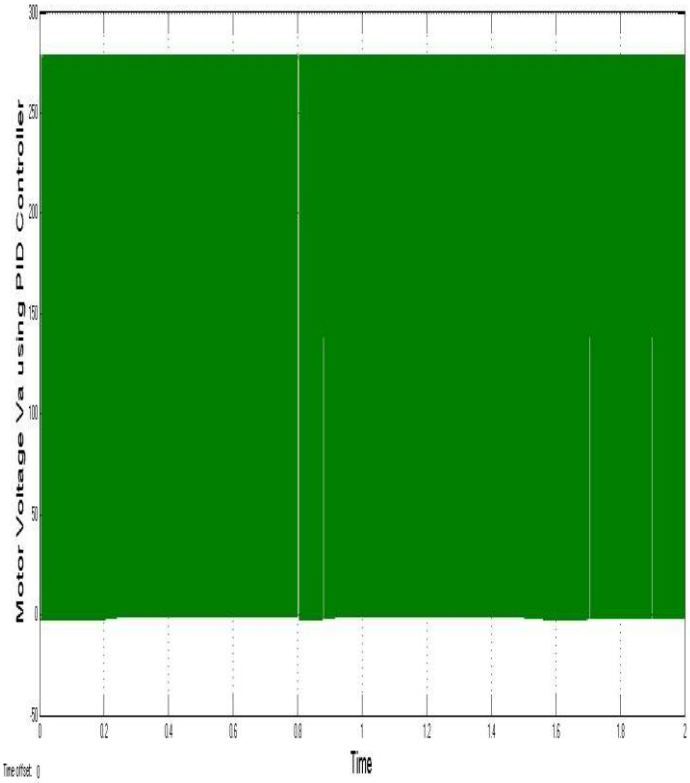

Fig 8- Motor voltage Va using conventional PID controller

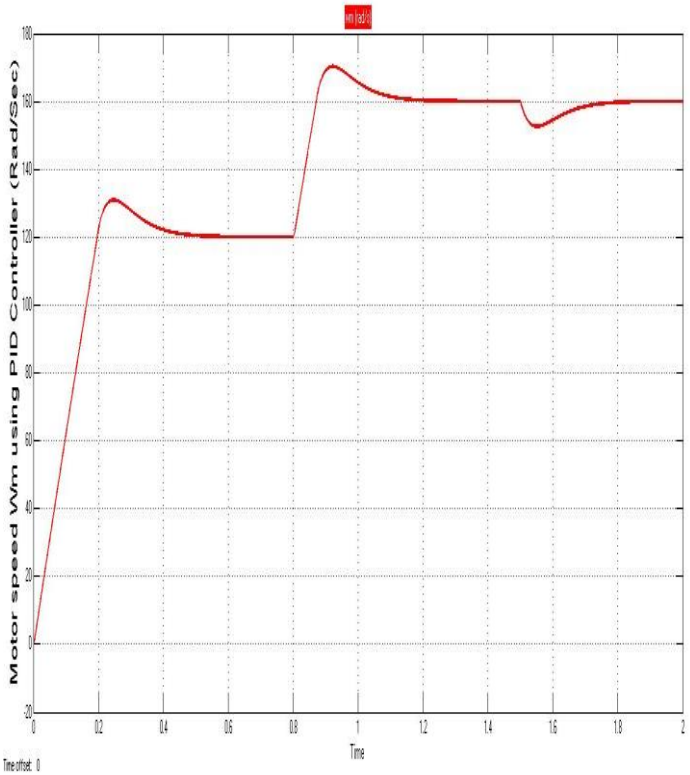

Fig 9- Motor speed Wm using conventional PID controller

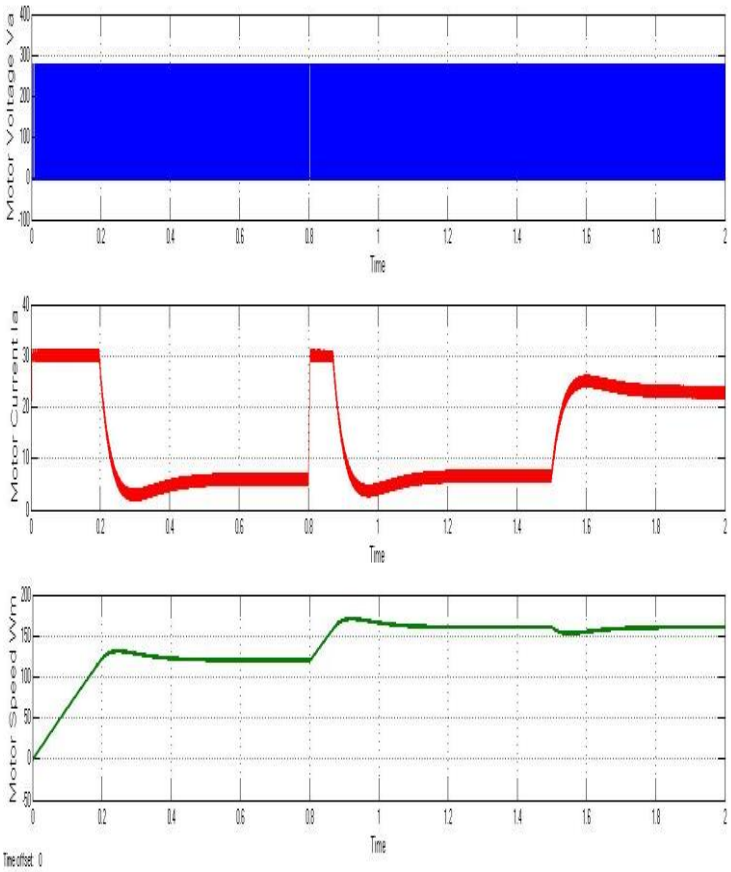

Fig 10- Motor All Parameters using PID Controller

Matlab Simulation of D.C Motor Drive using Chopper

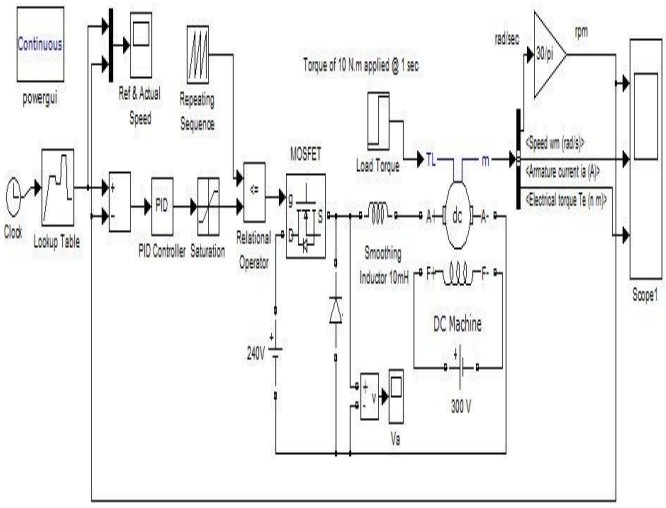

Fig 11- Matlab Simulation of Chopper Fed D.C Motor Drive

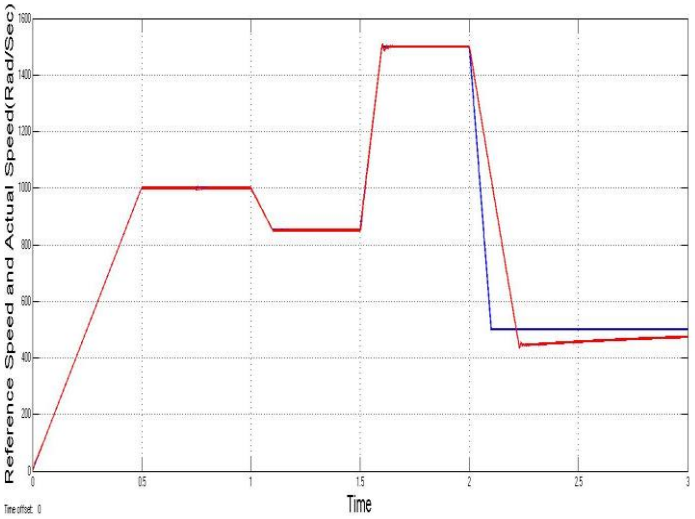

Fig 12- Actual and Reference Speed using PID Controller

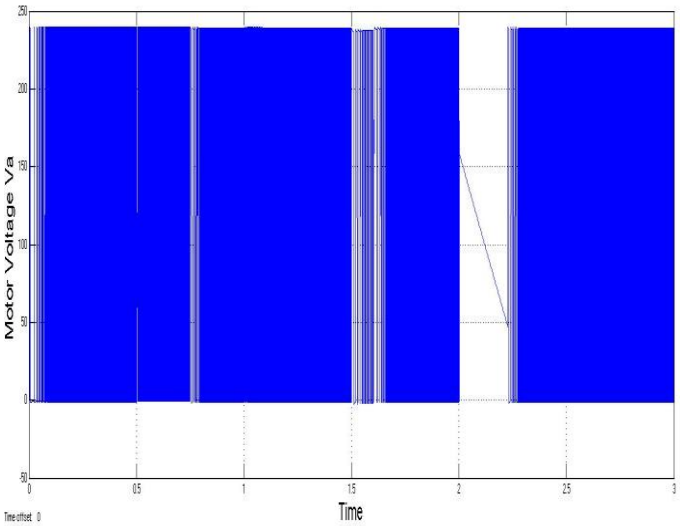

Fig 13- Motor Voltage Va using PID Controller

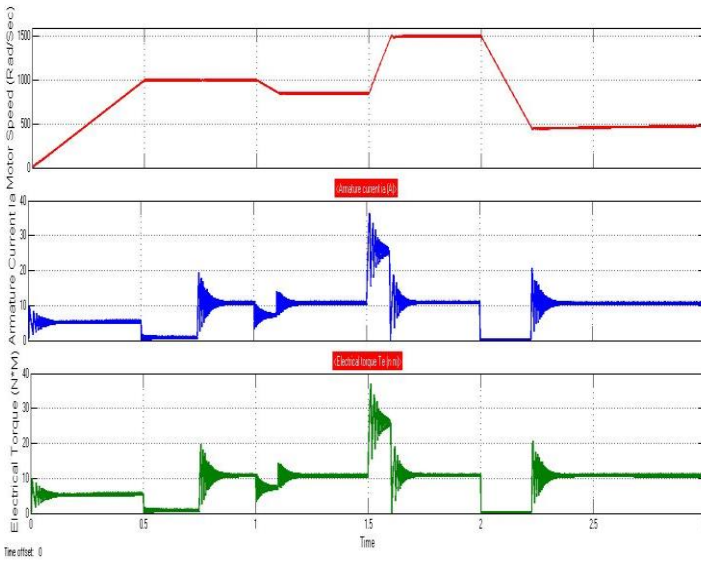

Fig 14- Motor All Parameters using PID Controller

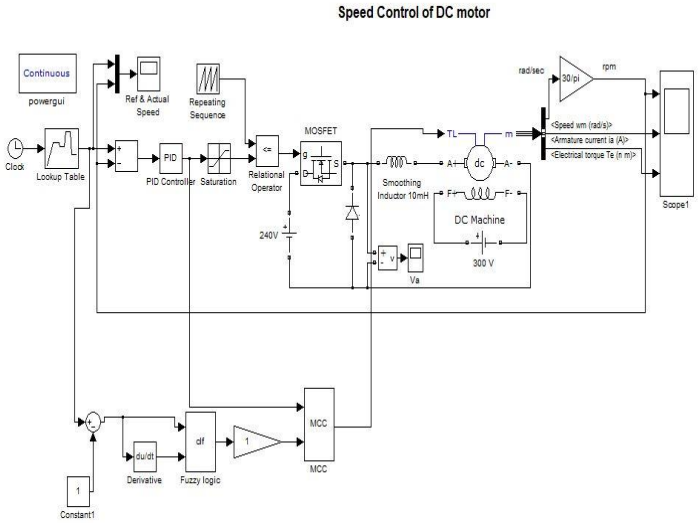

Fig 15- Matlab Simulation of Hybrid Controller Fed D.C Motor

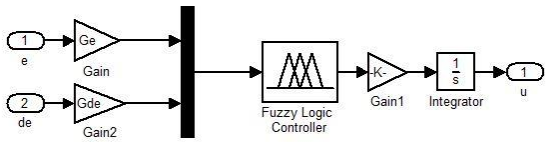

Fig 16- Fuzzy Logic Control subsystem

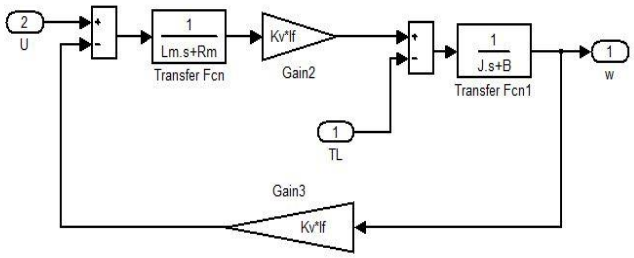

Fig.17- Angular Speed Control subsystem

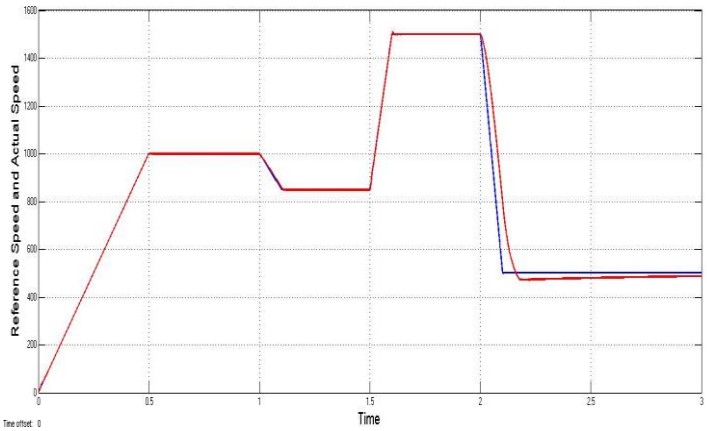

Fig.18- Speed Change Comparison

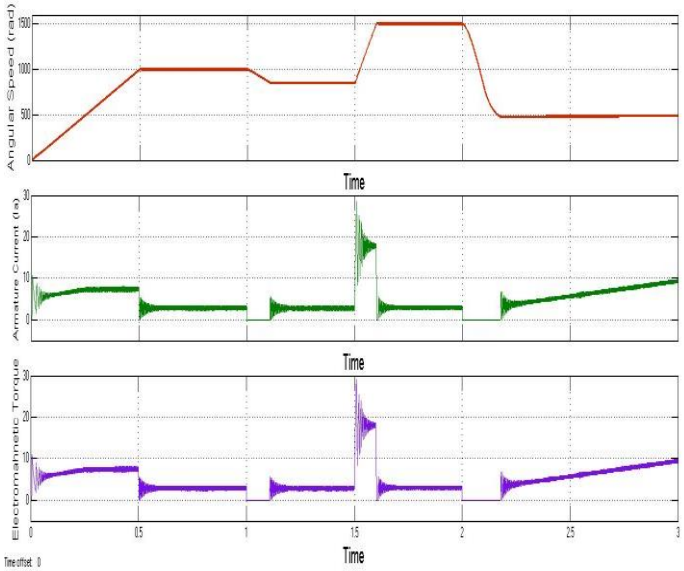

Fig.19- D.C Motor All Controlling Parameters

V. CONCLUSION

Initially, a simplified closed-loop model for speed control of DC motor is considered and the requirement of the current controller is studied. Then generalized modeling of dc motor is done. After that, a complete layout of the DC drive system is obtained. Then designing of current and speed controller is done. The optimization of the speed control loop is achieved through the Modulus Hugging approach. A DC motor specification is taken and corresponding parameters are found out from the derived design approach. Ultimately simulation is done for the model with and without filter used after reference speed and a comparative study is done on the response of both cases. Based on the simulation result shown, it can be concluded that Hybrid Control for DC Motor can be designed to produce a response similar to the conventional fuzzy PID controller. It is proved that in the case of a nonlinear control system, a fuzzy-based controller ensures much dynamic response as the PID controller had to deal with overshoot and undershoot problems. For further evaluation, the controller should be implemented in hardware to study more on the proposed controller.

REFERENCES

(1) Atul Kumar Dewangan, Durga Sharma, Shikha Mishra, “PID Controller Based Chopper-Fed DC Motor Drive Using Fuzzy Logic” 2248-9622-Vol. 2, Issue 3, May-Jun 2018 IEEE.
(2) K.S.Krishna Veni, Dr. N. Senthil Kumar, J.Gnanavadivel, "Low-Cost Fuzzy Logic Based Speed Control of dc Drives” 2248-9622-Vol. 2, Issue 3, May-Jun 2017 IEEE.
(3) M.A. Abdel Ghany, MohamedA. Shamseldin, A.M. Abdel Ghany “A Novel Fuzzy Self Tuning Technique of Single Neuron PID Controller for Brushless DC Motor” International Journal of Power Electronics and Drive System (IJPEDS) Vol. 8, No. 34, December 2017.
(4) T.Hemanand and T. Rajesh, “Speed Control of Brushless DC Motor Drive Employing Hard Chopping PWM Technique Using DSP” Proceedings of India International Conference on Power Electronics 2016.
(5) N. N. Baharudin and S.M. Ayob, “ Brushless DC Motor Drive Control using Single Input Fuzzy PI Controller (SIFPIC) ” 978-1-4799-8598-2/15/ ©2015 IEEE.
(6) Ling Xu, Jian-Guo Song, Qiang- Qiang Lin, “Brushless DC Motor Speed Control System Simulink Simulation” 2016 IEEE International Conference on Power and Renewable Energy, 978-1-5090-3068-2/16/©2016 IEEE.
(7) Hakan Kahveci, Halil Ibrahim Okumus, and Mehmet Ekici “A Fuzzy Logic Speed and Current Controller for Brushless DC”, 978-1-4799-0661-1/13/2013 IEEE.
(8) Mehmet Fatih CANKURTARAN 1, Ali Eren KOCAMIS “Sensor less Speed Control of PMDC Motor with Cascade PI Controller” 978-1-7281-2181-9/19/©2019 IEEE.
(9) Prerna Jairam Khobragade and Jagdish Choudhary, “A Comparative Study of PID and Fuzzy Controller for Speed Control of Brushless DC Motor Drive” International Research Journal of Engineering and Technology (IRJET), Volume: 03 Issue: 02 | Feb-2016.
(10) M. Surya Kalavathi, and C. Subba Rami Reddy, "Performance Evaluation of Classical and Fuzzy Logic Control Techniques for Brushless DC Motor Drive ".
(11) Harshitha KT, K.V.Shettigar “Closed Loop Speed Control Analysis of DC Motor “NMAM Institute of Technology, Nitte, Vol. 4, Special Issue 2, April 2016.