MEASUREMENT OF TEMPERATURE WITH SENSOR LM35

Dr.DeepakSonker*(Deepak.sonker13@yahoo.com),Tecnia Institute of Advanced Studies*

Dr. Vishal Khatri*(vishalkhatribpit@gmail.com),Bhagwan Parshuram Institute of Technology*

Dr. Ranjeeta Kaur*(ranjeetapopli@gmail.com),Tecnia Institute of Advanced Studies*

Ms. Ambooj Yadav*(amboojyadav@gmail.com)Tecnia Institute of Advanced Studies*

Abstract: Temperature is the number assigned to an object to indicate its warmth. The concept of temperature came about because people wanted to quantify and measure differences in warmth. When an object with a higher temperature comes in contact with a cooler object, a transfer of heat occurs until the two objects are the same temperature. When the heat transfer is complete, it can be said that that the two objects are in thermal equilibrium. Temperature can hence be defined as the quantity of warmth that is the same for two or more objects that are in thermal equilibrium. The temperature 0°C, 273.16 K (kelvin), is the point at which ice, water, and water vapor are all present and in thermal equilibrium. This is known as the triple point of water. Absolute zero temperature occurs when the motion of atoms and molecules practically stops, which occurs at −273°C, or 0 K. The first calibrated thermometer was the liquid in glass thermometer which was later divided in mercury in glass thermometer and alcohol in glass thermometer. During the invention of this thermometer some facts were not in place which lead to their disadvantages and with the aid of technology advancement digital thermometer came into existence. Digital thermometer brings together the likes of microcontroller to be interfaced with Lm35 temperature sensor all together working with an embedded C programming language. In advancement in technology, digital thermometer can be added to home automation utilizes, IOT service for medical records, industrial jobs and many more.

Key Words: Temperature Sensor (LM 35); Thermometer; Monitoring device(serial monitor); Measurement.

Introduction:

LM35 is a precession Integrated circuit Temperature sensor, whose output voltage varies, based on the temperature around it. It is a small and cheap IC which can be used to measure temperature anywhere between -55°C to 150°C. It can easily be interfaced with any Microcontroller that has ADC function or any development platform like Arduino.

Power the IC by applying a regulated voltage like +5V (V_S) to the input pin and connected the ground pin to the ground of the circuit. Now, you can measure the temperate in form of voltage as shown below.

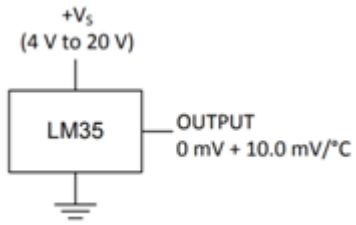

If the temperature is 0°C, then the output voltage will also be 0V. There will be rise of 0.01V (10mV) for every degree Celsius rise in temperature. The voltage can converted into temperature using the below formulae.

V_{OUT} = 10 mv/°C × T

where

- V_{OUT} is the LM35 output voltage
- T is the temperature in °C

Statement of the Problem :

The microcontroller based system developed will automatically detect the temperature of a particular atmosphere or a room. Noticing or taking into consideration the results of an operation being carried out due to the temperature of the room or atmosphere. For instance, in a laboratory where experiments are being carried out on different items, a certain temperature is required and needs to be maintained in order to achieve a good result on the experiment being carried out.

Aims and Objectives

Digital room temperature is very important since it is needed to keep in check a certain temperature of a room or an atmosphere digitally. That means it overrides the stress of using an analog temperature reader which might involve more calculations to get the current temperature of the environment. This system enables the user to obtain more precise representation of the temperature in the room using LM35 temperature sensor.

History of Temperature Measurement:

The temperature of the human body has been used as a diagnostic sign since the earliest days of clinical medicine. Hippocrates taught that the human hand can be used to judge the presence of fever as early as 400 BC, but instruments to measure this temperature were not developed until the sixteenth and seventeenth centuries. Even then, the journey to the routine measurement of temperature in clinical practice was a long one, with many different people contributing to the arrival of the small, inexpensive, and accurate instrument known throughout the world as ‘the clinical thermometer’. A thermometer is essentially an instrument that can measure temperature. It detects changes in physical properties of an object or substance as the temperature of the object changes. The expansion and contraction of air with changes in temperature was noted as early as 220 BC by Philo of Byzantium. It was later realized that water also has this property, as do other fluids and metals such as mercury. As a result, there are now many different forms of thermometers which have been developed over a period of several hundred years.

Method: This chapter provides the detailed explanation on how the system was designed and constructed. The system is composed of two major parts the software development and the hardware development/ the software part discuss the virtual part of the systems, the circuit diagram, simulation of the circuits and the designing the PCB layout. The hardware development focuses on that physical aspect

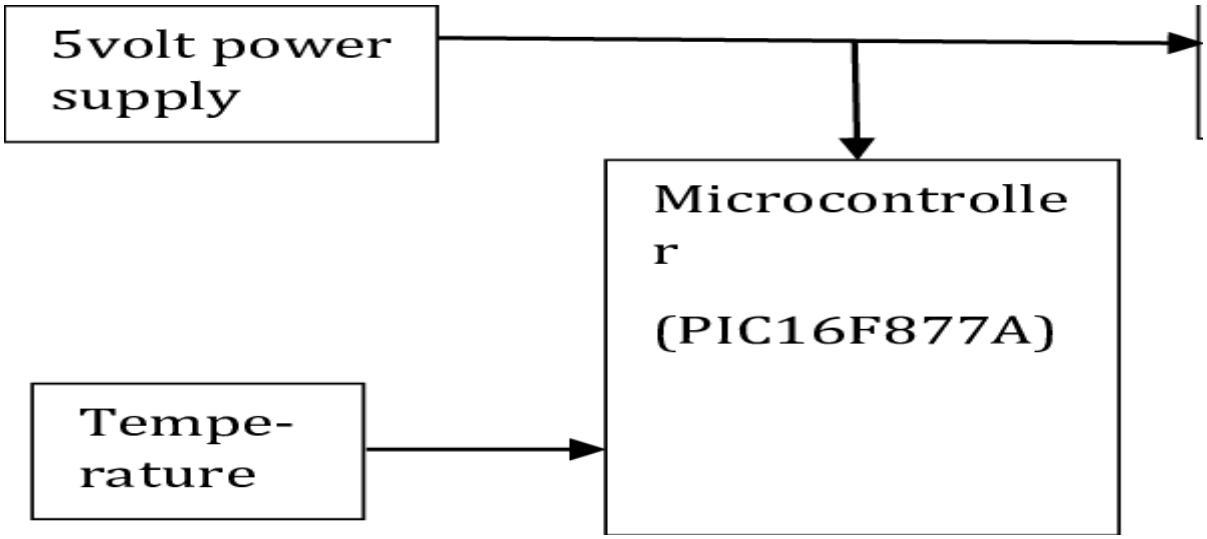

The block diagram of temperature monitoring system consists of temperature sensor, ADC, microcontroller and LCD. LM35 is used as temperature sensor it senses the temperature. The output of Temperature sensor is in the form of analog signal. ADC0804 is used

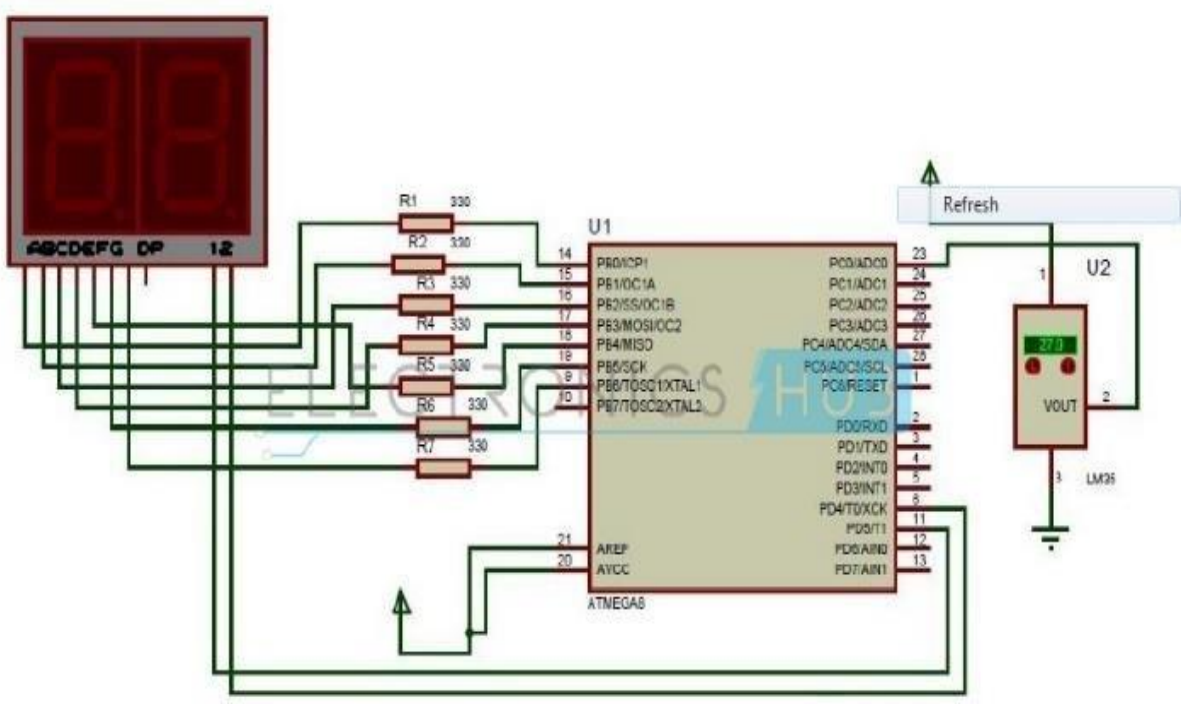

Hardware description of LM 35

LM35 is a temperature sensor that outputs an analog signal which is proportional to the instantaneous temperature. The output voltage can easily be interpreted to obtain a temperature reading in Celsius. The advantage of lm35 over thermistor is it does not require any external calibration. The coating also protects it from self-heating. Low cost (approximately $0.95) and greater accuracy make it popular among hobbyists, DIY circuit makers, and students. Many low-end products take advantage of low cost, greater accuracy and used LM35 in their products. Its approximately 15+ years to its first release but the sensor is still surviving and is used in any products.

LM35 can measure from -55 degrees centigrade to 150-degree centigrade. The accuracy level is very high if operated at optimal temperature and humidity levels. The conversion of the output voltage to centigrade is also easy and straight forward . The input voltage to LM35 can be from +4 volts to 30 volts. It consumes about 60 microamperes of current. Lm35 has many family members a few names are LM35C, LM35CA, LM35D. All LM35 family members work on the same principles but temperature measuring capacity varies and also they are available in many packages (SOIC, TO-220, TO-92, TO).

ISSN NO:1934-7197

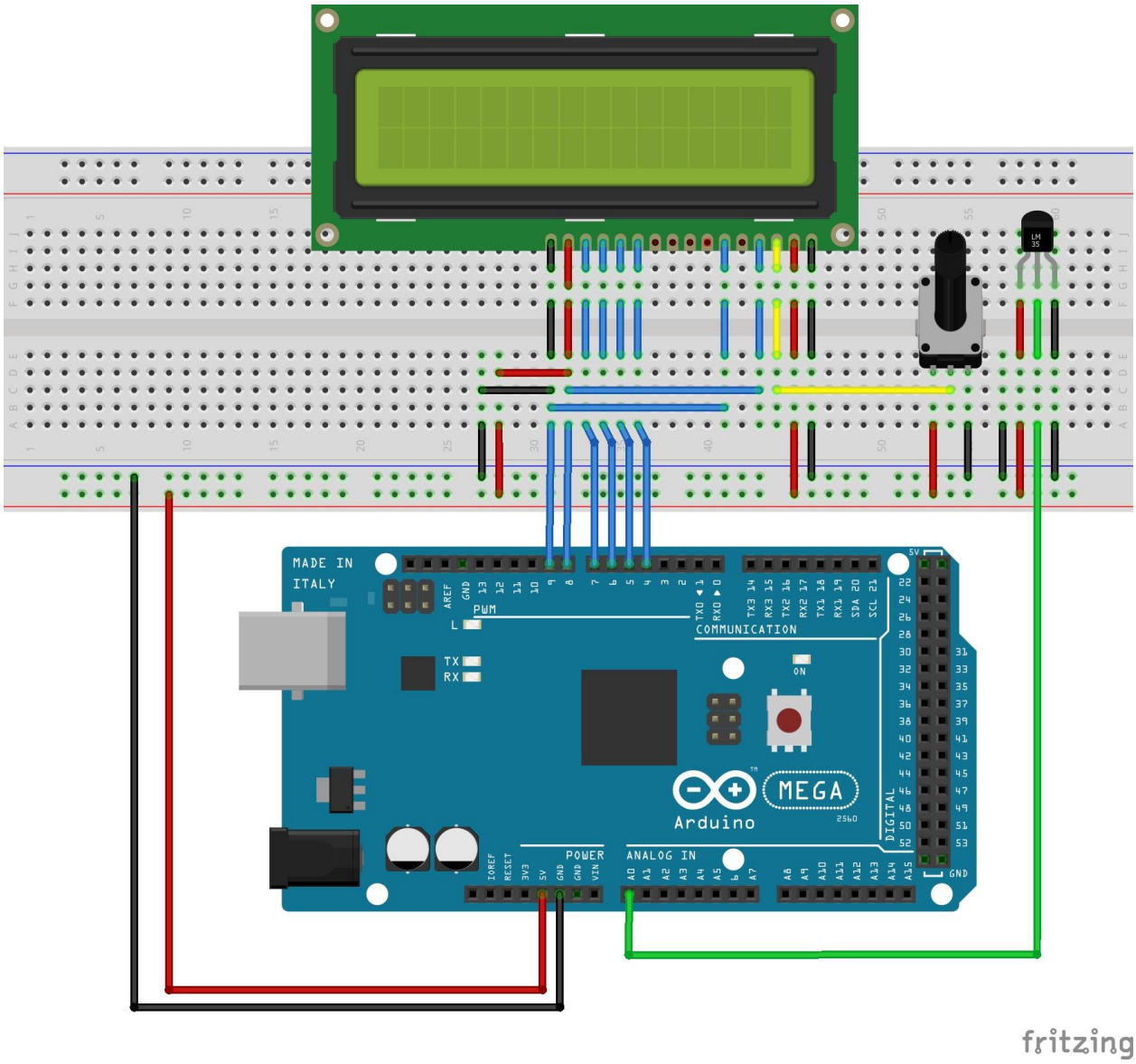

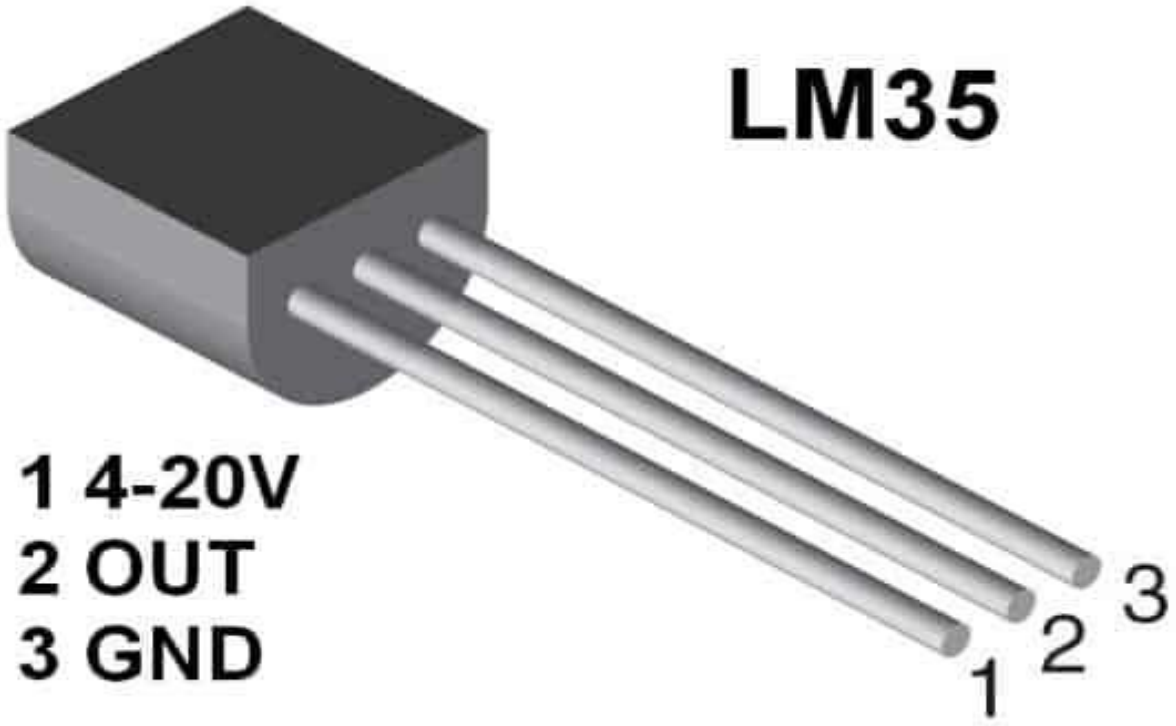

LM35 Temperature sensor Features

- Calibrated Directly in Celsius (Centigrade)
- Linear + 10-mV/°C Scale Factor
- 0.5°C Ensured Accuracy (at 25°C)
- Rated for Full −55°C to 150°C Range
- Suitable for Remote Applications
- Operates from 4 V to 30 V
- Less than 60-µA Current Drain
- Low Self-Heating, 0.08°C in Still Air
- Non-Linearity Only ±¼°C Typical
- Low-Impedance Output, 0.1 Ω for 1-mA Load

LM35 Working Principle (Understanding LM35 Linear Scale Factor)

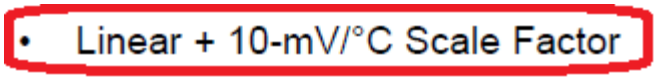

LM35 scale factor

In order to understand the working principle of LM35 temperature sensor we have to understand the linear scale factor. In the features of LM35 it is given to be **+10 mills volt per degree centigrade**. It means that with increase in output of 10 mills volt by the sensor vout pin the temperature value increases by one. For example, if the sensor is outputting 100 mills volt at vout pin the temperature in centigrade will be 10-degree centigrade. The same goes for the negative temperature reading. If the sensor is outputting -100 mills volt the temperature will be -10 degrees Celsius.

LM35 temperature sensor circuit configuration

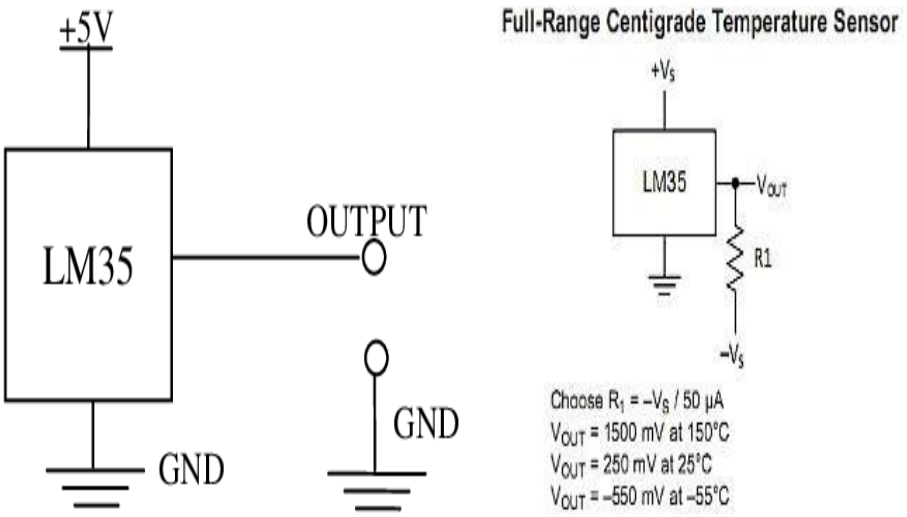

LM35 can be used in two circuit configurations. Both yield different results. In the first configuration, you can only measure the positive temperature from 2 degrees Celsius to 150 degrees Celsius. In this first configuration, we simply power lm35 and connect the output directly to analog to digital converters. In the second configuration, we can utilize all the sensor resources and can measure the full range temperature from -55 degree centigrade to 150-degree centigrade. This configuration is a little complex but yields high results. We have to connect an external resistor, in this case, to switch the level of negative voltage upwards. The external resistor value can be calculated from the formula given below the configuration circuit. The second configuration circuit can be made in various ways. To see about the second configuration circuits visit the LM35 datasheet by Texas Instruments. Texas Instruments data sheet enlists the circuit with clear component values.

Although the first configuration did not need a resistor at the output side, I recommend connecting an 80 k to 100 k resistor between vout and gnd pin. When I performed several experiments I noticed that the readings some time fluctuate and the vout pin floats. So a resistor between vout and gnd tights the vout pin low and prevents the pin from floating.

PARAMETER	VALUE
Accuracy at 25°C	±0.5°C
Accuracy from –55 °C to 150°C	±1°C
Temperature Slope	10 mV/°C

LM35 accuracy level

The accuracy parameters for both configurations are different. The average accuracy level is +- 1 degree Celsius for both configurations. But the accuracy level decreases for temperature between 2 degrees to 25-degree centigrade. Now that we have discussed the LM35 temperature sensor pinout, structure, linear scale factor and accuracy level its time to list down the steps on how to measure temperature using LM35 temperature sensor.

Steps to calculate temperature using LM35 temperature sensor

- Build circuit.
- Power LM35 vcc to +5-20 volts and gnd to ground.
- Connect Vout to analog to digital converter input.
- Sample the ADC reading, vout output voltage.
- Convert the voltage to temperature.

Formula to convert voltage to temperature

The formula to convert the voltage to centigrade temperature for LM35 is
Centigrade Temperature = Voltage Read by ADC / 10 mV(mills Volt)

I divided by 10 mV because Linear scale factor is for LM35 is 10mV.

Following the above steps and tutorial, you can easily interface LM35 temperature sensor with any microcontroller that has a built-in analog to digital converter pins. Almost all the microcontrollers today have built-in ADC.

Digital Thermometer codes of the program

```
int i;
int backup;
int a;
int unit;
int value;
int vcc=A0;
int sensor=A1;
int gnd=A2;
int select=4;
int disp1=1;
int disp2=2;
int disp3=3;
int segA=5;
int segB=6;
int segC=7;
int segD=8;
int segE=9;
int segF=10;
int segG=11;
int segDP=12;
void setup()
{
  pinMode(disp1, OUTPUT);
  pinMode(disp2, OUTPUT);
  pinMode(disp3, OUTPUT);
  pinMode(segA, OUTPUT);
  pinMode(segB, OUTPUT);
  pinMode(segC, OUTPUT);
  pinMode(segD, OUTPUT);
  pinMode(segE, OUTPUT);
  pinMode(segF, OUTPUT);
  pinMode(segG, OUTPUT);
  pinMode(segDP, OUTPUT);
  pinMode(sensor, INPUT);
  pinMode(vcc, OUTPUT);
  pinMode(gnd, OUTPUT);
  pinMode(select, INPUT);
  digitalWrite(vcc, HIGH);
  digitalWrite(gnd, LOW);
}
  void loop()
 {
  value=analogRead(sensor); //Reads the sensor LM35
  value=value*5;
  unit=digitalRead(select); //Reads the selector switch
  if(unit==1)
  {value=value;}  // Output in celcius
  else
  {value=(value*1.8)+320;} //Output in Fahrenheit
  backup=value; //Backs up the content in variable value

 for(i=0;i<100;i++) //Loops the display loop 100 times(steadies the display)
 {value=backup;
  a=value%10;
  digitalWrite(disp1,LOW);
  digitalWrite(disp2,LOW);
  digitalWrite(disp3, HIGH);
  digitalWrite(segDP,HIGH);
  display(a);
  delay(4);
  value = value/10;
  a = value%10;
  digitalWrite(disp3,LOW);
  digitalWrite(disp2,HIGH);
  digitalWrite(segDP,LOW);
  display(a);
  delay(4);
  value=value/10;
  a=value;
  digitalWrite(disp2,LOW);
  digitalWrite(disp1,HIGH);
  digitalWrite(segDP,HIGH);
  display(a);
  delay(4);
 }
  }
```

```
int display (int a)
{
switch (a)
{
  case 0:
  digitalWrite(segA, LOW);
  digitalWrite(segB, LOW);
  digitalWrite(segC, LOW);
  digitalWrite(segD, LOW);
  digitalWrite(segE, LOW);
  digitalWrite(segF, LOW);
  digitalWrite(segG, HIGH);
   break;

  case 1:
  digitalWrite(segA, HIGH);
  digitalWrite(segB, LOW);
  digitalWrite(segC, LOW);
  digitalWrite(segD, HIGH);
  digitalWrite(segE, HIGH);
  digitalWrite(segF, HIGH);
  digitalWrite(segG, HIGH);
  break;

  case 2:
  digitalWrite(segA, LOW);
  digitalWrite(segB, LOW);
  digitalWrite(segC, HIGH);
  digitalWrite(segD, LOW);
  digitalWrite(segE, LOW);
  digitalWrite(segF, HIGH);
  digitalWrite(segG, LOW);
  break;

  case 3:
  digitalWrite(segA, LOW);
  digitalWrite(segB, LOW);
  digitalWrite(segC, LOW);
  digitalWrite(segD, LOW);
  digitalWrite(segE, HIGH);
  digitalWrite(segF, HIGH);
  digitalWrite(segG, LOW);
  break;

  case 4:
  digitalWrite(segA, HIGH);
  digitalWrite(segB, LOW);
  digitalWrite(segC, LOW);
  digitalWrite(segD, HIGH);
  digitalWrite(segE, HIGH);
  digitalWrite(segF, LOW);
  digitalWrite(segG, LOW);
  break;

  case 5:
  digitalWrite(segA, LOW);
  digitalWrite(segB, HIGH);
  digitalWrite(segC, LOW);
  digitalWrite(segD, LOW);
  digitalWrite(segE, HIGH);
  digitalWrite(segF, LOW);
  digitalWrite(segG, LOW);
  break;

  case 6:
  digitalWrite(segA, LOW);
  digitalWrite(segB, HIGH);
  digitalWrite(segC, LOW);
  digitalWrite(segD, LOW);
  digitalWrite(segE, LOW);
  digitalWrite(segF, LOW);
  digitalWrite(segG, LOW);
  break;

  case 7:
  digitalWrite(segA, LOW);
  digitalWrite(segB, LOW);
  digitalWrite(segC, LOW);
  digitalWrite(segD, HIGH);
  digitalWrite(segE, HIGH);
  digitalWrite(segF, HIGH);
  digitalWrite(segG, HIGH);
  break;

  case 8:
  digitalWrite(segA, LOW);
  digitalWrite(segB, LOW);
  digitalWrite(segC, LOW);
  digitalWrite(segD, LOW);
  digitalWrite(segE, LOW);
  digitalWrite(segF, LOW);
  digitalWrite(segG, LOW);
   break;

  case 9:
  digitalWrite(segA, LOW);
  digitalWrite(segB, LOW);
  digitalWrite(segC, LOW);
  digitalWrite(segD, LOW);
  digitalWrite(segE, HIGH);
  digitalWrite(segF, LOW);
  digitalWrite(segG, LOW);
  break;
}}
```

About the program.

The voltage output of the LM35 is scanned using the analogRead function. The analogRead function will read the voltage at a particular analog input pin and converts it into a digital value between 0 and 1023. If 30°C is the temperature, the LM35 output will be 300mV. The code value=digitalRead(sensor) will read this voltage, convert it into a digital value and stores it in the variable “value”. So, for 30°C the number stored in

variable “value” will be 3oomV/(5/1023)=61. This number is multiplied by 5 to get 305 a decimal point is place before the last digit while displaying on the seven segment display.The result will be 30.5°C.

The program also checks the status of the unit selector switch by reading the digital pin 4. If this pin is held high the temperature is displayed in °Celsius and if this pin is low the temperature in °Celsius scale is converted to °Fahrenheit and then displayed. The method used for displaying the number on the three digit seven segment display is same as that of used in Voltmeter using arduino.

Advantages and Economic Importance of Digital Thermometer

1. Digital thermometer can accurately take, decide and measure temperature with the aid of temperature sensor and digital display.
2. Digital thermometer is easier to read compare to glass thermometer
3. Digital thermometer is fast, accurate and convenient for use.
4. Digital thermometer can measure the body temperature and can ensure accuracy

Conclusion

The main purpose of this work was to design and construct a microcontroller based digital thermometer with .This has been achieved. The device has been tested and is working. This project illustrates the use of embedded systems particularly in instrumentation design and generally in the design of electronic devices. Embedded system design should be encouraged to simplify and provide flexibility for electronic circuits / electronic designs. Those seeking guidance on embedded system design that employ ADC interfacing, specialized LCD interfacing, digital filtering, etc. should avail themselves with this work.

In this Advanced technology in the past few years, whereby technology has been aiding the work of man daily. Digital thermometer is an innovation to end the error due to parallax reading in liquid in glass thermometer and also comfort the easy access and accurate reading of temperature. Digital thermometer can further more be advanced into home automations, use in cold rooms, food temperature reserve and so on.

References:

1) https://how2electronics.com/digital-thermometer-arduino-lm35-temperature-sensor/
2) https://www.circuitstoday.com/digital-thermometer-using-arduino
3) https://components101.com/sensors/lm35-temperature-sensor
4) https://www.engineersgarage.com/knowledge_share/lm35-description-and-working-principal/
5) https://www.circuitstoday.com/lm35-and-arduino-interfacing
6) https://create.arduino.cc/projecthub/TheGadgetBoy/making-lcd-thermometer-with-arduino-and-lm35-36-c058f0
7) https://www.instructables.com/Arduino-Thermometer-LM35-LCD/
8) https://www.allaboutcircuits.com/projects/monitor-temperature-with-an-arduino/