MODELLING AND CONTROL OF BLDC MOTOR FOR ELECTRIC VEHICLES APPLICATION

***Pathan Mohsin[1] & Prof. Z.B. Parekh[2]**
[1]M.E Scholar, [2]Assistant Professor
[1, 2] Department of Electrical Engineering
[1, 2] LD College of Engineering, Ahmedabad, Gujarat, India.
[1] pathanmohsin42@gmail.com, [2]zbp.ldce@gmail.com*

Abstract: Due to easy of control and high power density BLDC motors discover vast applications in electric vehicles. A 3-phase power semiconductor bridge controls these motors. To turn on the power devices in the inverter bridge, proper commutation sequence is necessary. So the rotor position sensors required. The semiconductor devices are commutated at every 60 degrees sequentially which are based on the position of rotor. The aim of the research is to develop a complete model of BLDC motor and to design an optimal controller for its position control. To prove the desired level of performance, the motor necessitates proper speed controllers. In the case of PM motors, proportional-integral (PI) controller is generally used to control the speed of the motor. Due to ease of control structure and ease of implementation, conventional PI controllers are commonly used in the electric vehicles; these controllers pose problems where there is some complexity in control such as nonlinearity, disturbances, and load parametric variations. To regulate the speed of the motor, PI control strategy has been used.

Keywords: *Brushless DC Motor, Hall effect sensor, Inverter, Battery bank, Controller.*

1. Introduction

The control of DC motor doesn't require much complex hardware. It is simple. So, the main disadvantage of the dc motor is the necessity of periodic maintenance. The mechanical commutator brushes ultimately exhaust and need to be changed. The mechanical commutator also has unwanted effects such as sparks, acoustic noise, and carbon particles coming from the brushes. With speedy progress in power electronics, manufacturing technology for high-performance magnetic materials, semiconductor topologies, modern control strategies for motors and the PMBLDC motors have been commonly used in various electric and other applications. Many benefits of PMBLDC over conventional DC motors alike high efficiency and dynamic response, long operating life, noiseless operation, higher speed range and higher torque- Weight ratio, better speed vs. torque characteristics. Due to the harmful emissions and increasing petroleum prices the automobile-industries has been extremely looking for the alternative propulsion systems which have run to raise rate of the growth of the EV and HEV technologies. Innovative generations of equipment have higher performance factors such as reduced electromagnetic interference and better efficiency, etc.

The operation of PMBLDC motor has been broadly used in the variable speed control of AC motor drives because the PMBLDC motor has lower cost and simple structure than the other AC motors. PMBLDCM also want position information for torque producing and using hall sensors this information is achieved. It increases rotor inertia and machine size and also makes complex system drive and mechanically complex drive. This motor has 3-phase stator winding and a permanent magnet on stator and rotor respectively. The torque established in this motor is affected by the waveform of the back-emf waveform. Generally, the PMBLDCM has trapezoidal back-emf waveform and stator is fed through rectangular stator current. Ideally, it provides a constant torque but due to back-emf waveform imperfection, phase current commutation and current ripple, the torque ripple occurs, BLDC motor is defined as a PMSM motor by given the trapezoidal Back emf waveforms.

2. Working Principal

A PMBLDC motor is a just an ordinary DC motor. It means, the coil is on the stator (outside) and the magnets are rotor (inside) which is shown figure. The stator windings are switched off and on depending on the rotor position. So that the rotor and stator produce a magnetic field and it will be synchronized. With the application of power transistors, the switching operation of the windings is achieved electronically to create a rotating magnetic field in the air gap. The voltage may be AC or DC which applied to the switching circuit, the

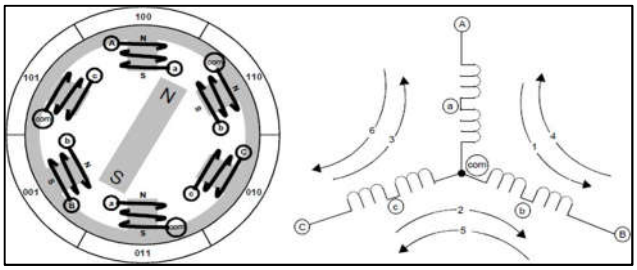

Figure 1 Three phase BLDC Motor

voltage frequency supplied to stator windings which fluctuate with load results with the motor to run as a synchronous motor at that frequency. The torque established by the PMBLDC motor is directly related to the armature current.[6]

3. Operation

The 3-phase PMBLDC motor is functioned in a two phase i.e. this two phases are energized while the third phase is off and generates the highest torque. These two phases are energized depends on the rotor position. The information from the position sensors produces a three digit number that deviations every 60 as shown in figure i.e. H1,H2 and H3. The figure also displays the idyllic current and back emf waveform. [3]

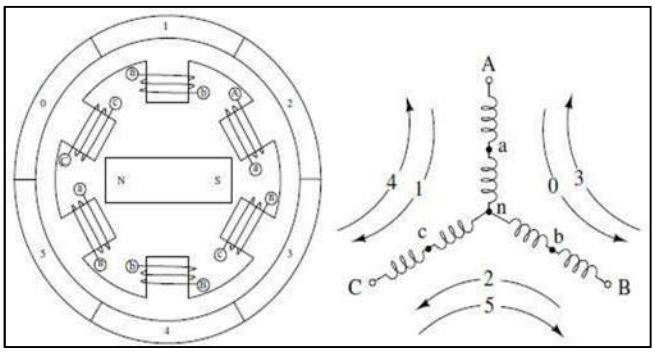

Fig. 2: Cross Section PMBLDC motor and Phase Energizing

Figure shows 3-phase star connected motor in conjunction with its phase energizing sequence. In this each interval starts with the rotor and stator field lines at 120 away from each other and ends when they are 60 away from each other. When the field-lines are perpendicular, maximum torque is stretched. Current commutation is done by a six step inverter as presented in a simplified from in figure. The switches are presented as bipolar junction transistor but MOSFET switches are more common. Table shows the current direction, the switching sequence, and the position sensor signals.

Hall sensor input			Active Switch		Phase current		
H1	H2	H3			A	B	C
0	0	1	S5	S4	OFF	-	+
1	0	1	S1	S4	+	-	OFF
1	0	0	S1	S6	+	OFF	-
1	1	0	S3	S6	OFF	+	-
0	1	0	S3	S2	-	+	OFF
0	1	1	S5	S2	-	OFF	+

Table 1: Switching Sequence for CW Mode

4. Mathematical Modelling

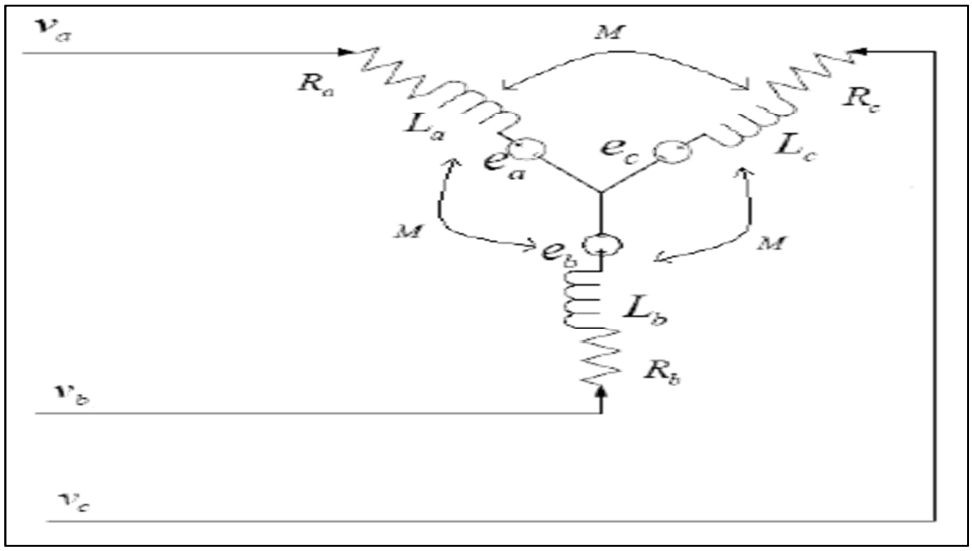

Fig. 4: 3-phase Equivalent circuit of PMBLDC Motor

A three phase BLDC motor equation can be represented as

$$V_a = R_a i_a + L_a \frac{di_a}{dt} + M_{ab} \frac{di_b}{dt} + M_{ac} \frac{di_c}{dt} + E_a \quad (1.1)$$

$$V_b = R_b i_b + L_b \frac{di_b}{dt} + M_{ba} \frac{di_a}{dt} + M_{bc} \frac{di_c}{dt} + E_b \quad (1.2)$$

$$V_c = R_c i_c + L_c \frac{di_c}{dt} + M_{ca} \frac{di_a}{dt} + M_{cb} \frac{di_b}{dt} + E_c \quad (1.3)$$

Voltage Equations

$$V_a = R i_a + L \frac{di_a}{dt} + E_a \quad (1.4)$$

$$V_b = R i_b + L \frac{di_b}{dt} + E_b \quad (1.5)$$

$$V_c = R i_c + L \frac{di_c}{dt} + E_c \quad (1.6)$$

Back-emf of each phase has a phase difference of 120 electrical degree and back emf and rotor position are related some function. Equation of each phase for back-emf is as follows

$$E_a = K_e \omega f_a(\theta) \quad (1.7)$$

$$E_b = K_e \omega f_b\left(\theta - \frac{2\pi}{3}\right) \quad (1.8)$$

$$E_c = K_e \omega f_c\left(\theta + \frac{2\pi}{3}\right) \quad (1.9)$$

Rotor angle electrical $[\theta_e]$ and the rotor angle mechanical $[\theta_m]$ are related as

$$\theta_e = (p/2)\theta_m \quad (1.10)$$

The key to effective torque and speed control of a BLDC motor is based on relatively simple torque and back EMF equations, which are similar to those of the DC motor. The generated electromagnetic torque is given by

$$T_e = \frac{[E_a i_a + E_b i_b + E_c i_c]}{\omega} \quad (1.11)$$

The electromagnetic torque is also related with motor constant and the product of the current with the electrical rotor position which is given as

$$T_e = K_t\{f_a(\theta) i_a + f_b(\theta) i_b + f_c(\theta) i_c\} \quad (1.12)$$

The equation of motion for simple system is,

$$T_e = J\frac{d\omega}{dt} + B\omega + T_l \quad (1.13)$$

Where,

T_l is the load torque [Nm],
J is motor inertia [Kgm^2],
B is damping (friction) constant [Nms.rad^{-1}]

The relation between angular velocity and angular position (electrical) is given by

$$\frac{d\theta}{dt} = \left(\frac{p}{2}\right) * \omega$$

The set of these equations define the model developed in terms of the variables i_a, i_b, i_c, ω, T_e with time as an independent variable.

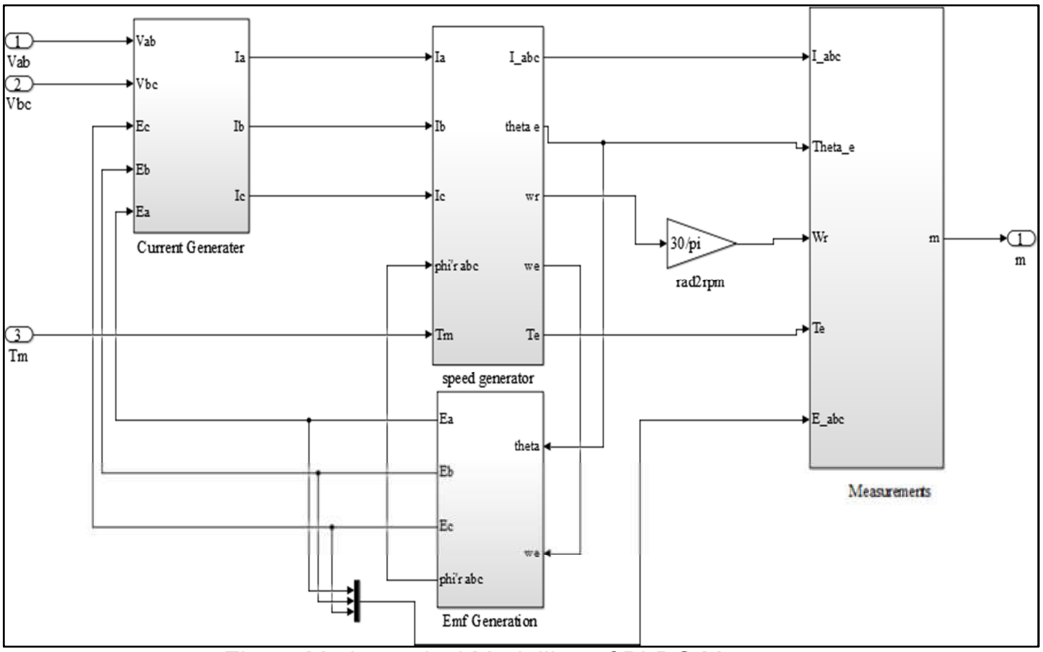

Fig. 5: Mathematical Modelling of BLDC Motor

5. Simulation and Results

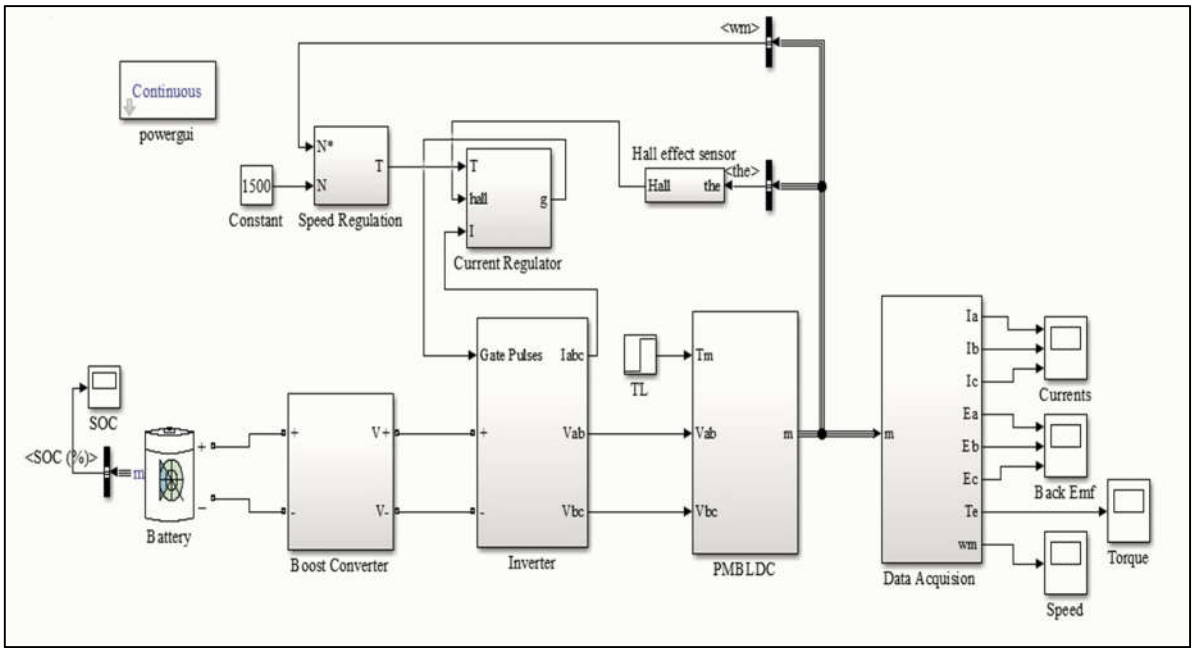

Fig. 6: Simulation of BLDC Motor

Simulation of the PMBLDC motor model with is prepared in MATLAB/ SIMULINK software.

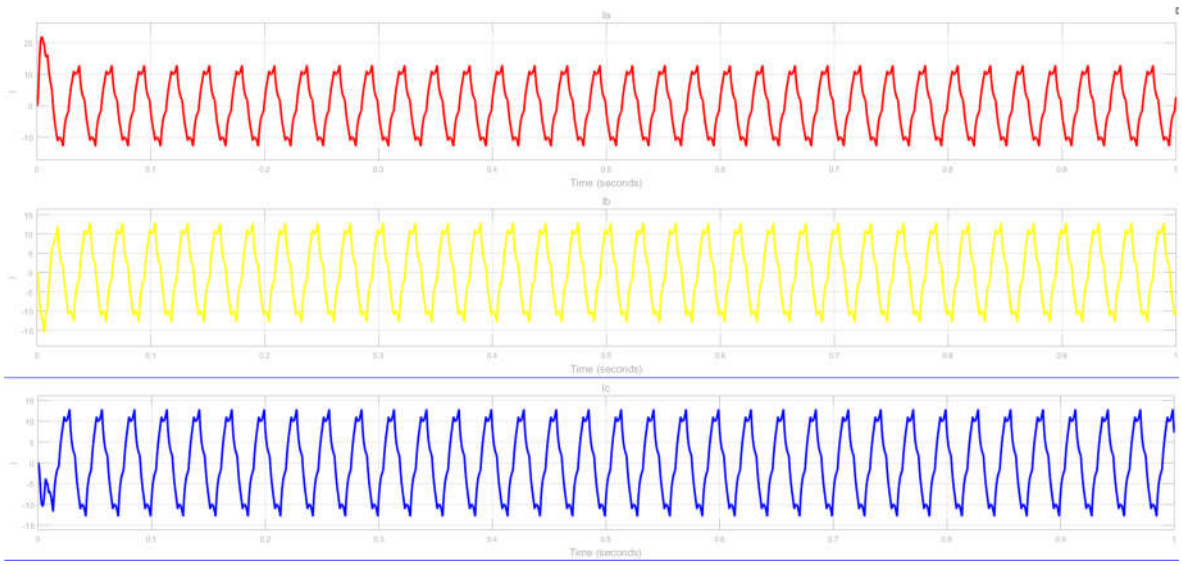

Figure 7: Current Waveform of BLDC motor

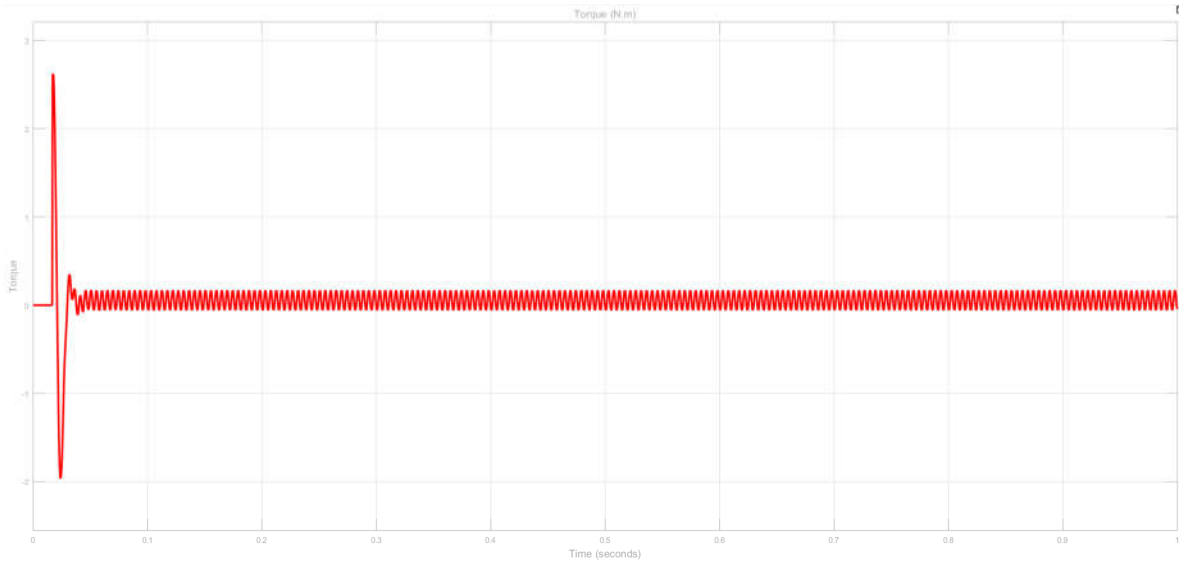

Figure 8: Torque Waveform of BLDC motor

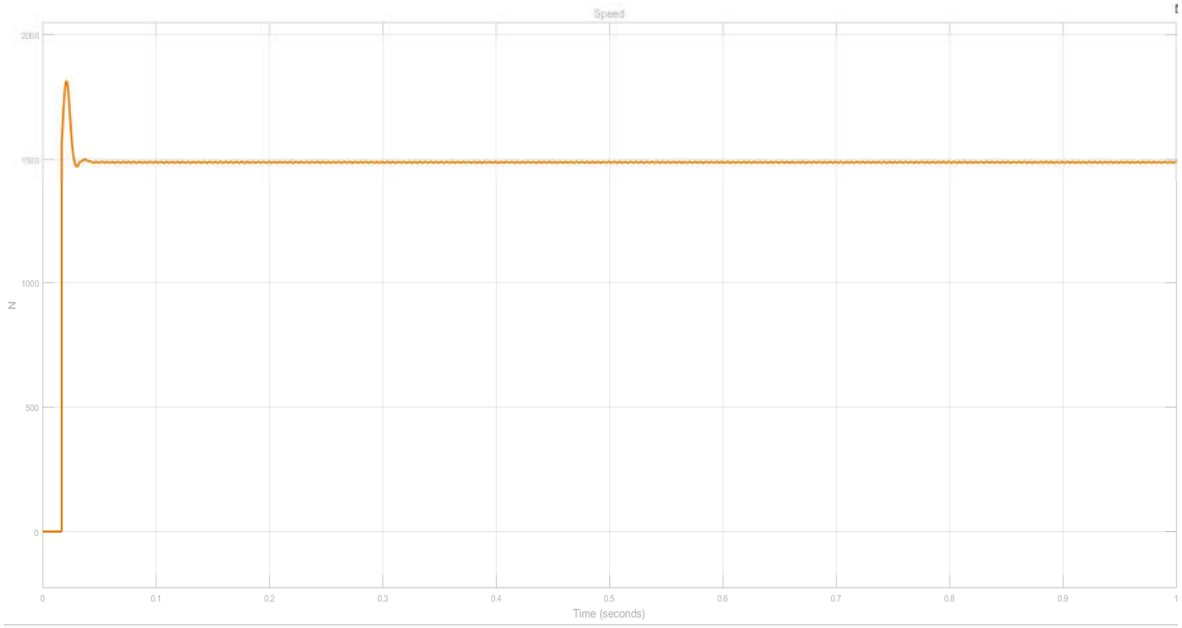

Figure 9: Speed Waveform of BLDC motor

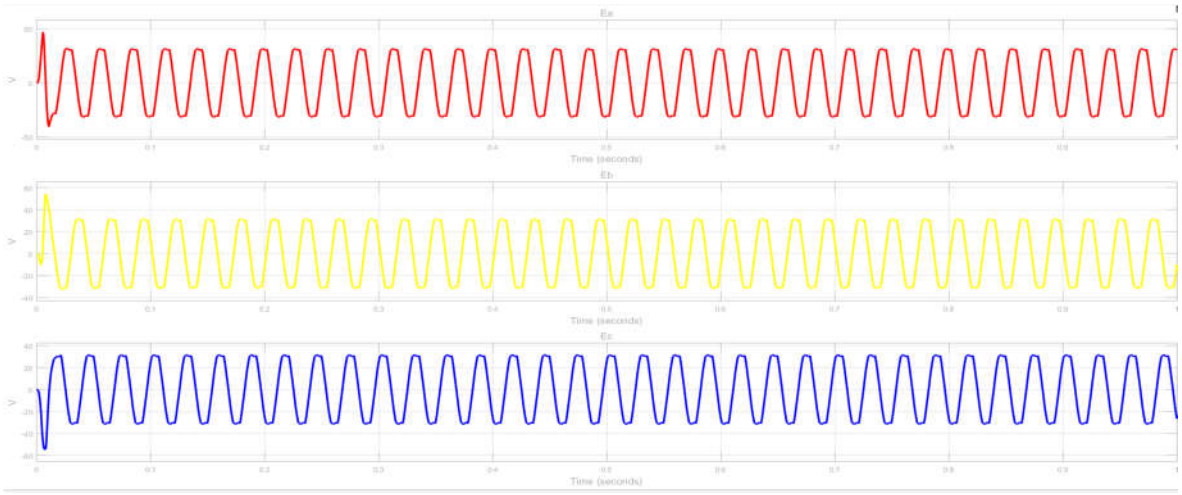

Figure 10: Back emf waveform of BLDC motor

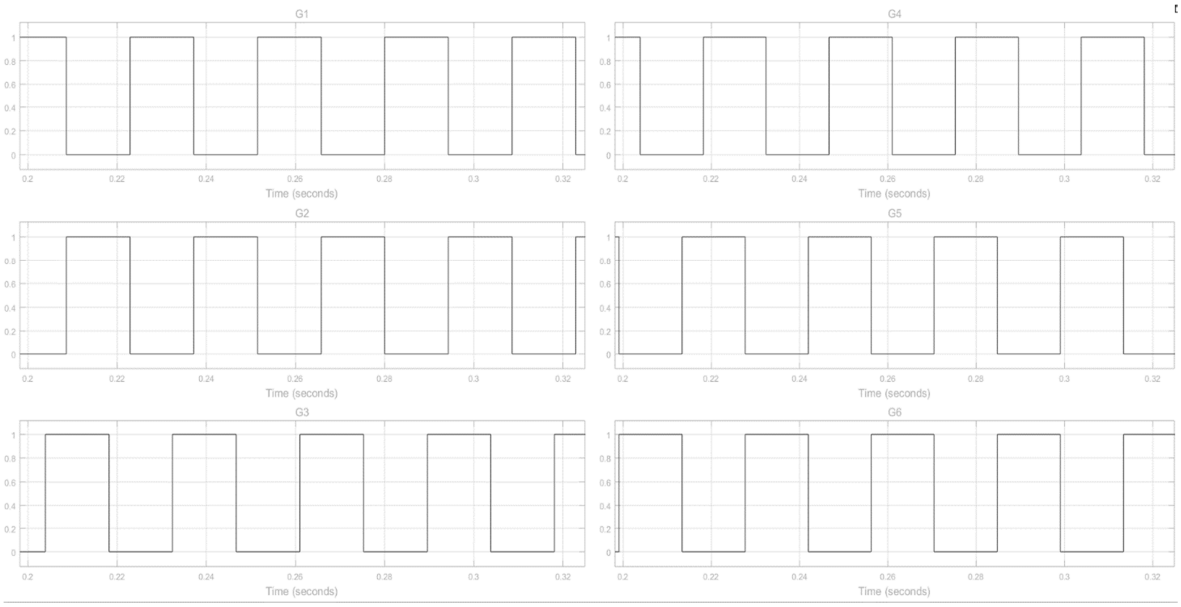

Figure 11: Gate Pulses for Power Switches

PARAMETER	
R	**2.8750 ohm**
L	**0.0085 H**
J	**0.8e-3 kg-m^2**
B	**1e-3**
p	**4**
V	**96 V**
I	**9.8 A**
I/P Power	**0.165 kW**
N	**1496 rpm**
O/P Power	**0.140 kW**
PMBLDC Motor	**0.105 HP**
Inverter O/P Voltage	**96 V**
Reduction of torque pulsation	**1.2 Nm to 0.2 Nm**

6. Conclusion

The advantages of BLDC motor is simple control, less noise, high efficiency, less maintenance, more compact construction and ease in cooling. The presented model gives a complete view of the BLDC motor. In all real-time applications, it can be implemented. The commutation mechanism and feedback signal utilize speed, the position of rotor and stator current.

In this project work, a mathematical model of BLDC motor is developed. Using the software package MATLAB/SIMULINK, the simulation of the BLDC motor is done and its phase current, phase voltage, back-emf, torque and speed waveform are analyzed.

7. Acknowledgement

I wish to thank my guide, Prof. Z. B. Parekh for his inspiration and continuous support. Without her valuable advice and assistance, it would not have been possible for me to attain this landmark. She has always been willingly present whenever I needed the slightest support from her. I would not like to miss a chance to say thanks for the time that her spared for me, from his extremely busy schedule.

I would like to thank all of them whose name are not mentioned here but have played a significant role in my way to accomplish the work.

REFERENCES

[1] F. L. Luo and H. G. Yeo, "Advanced PM brushless DC motor control and system for electric vehicles," in *Industry Applications Conference, 2000. Conference Record of the 2000 IEEE*, 2000, pp. 1336-1343.

[2] M. C. Joshi and S. Samanta, "Modeling and control of bidirectional DC-DC converter fed PMDC motor for electric vehicles," in *2013 Annual IEEE India Conference (INDICON)*, 2013, pp. 1-6.

[3] G. R. Kumar, K. Prasad, and M. A. N. Doss, "Improve the transient response of speed and torque ripple minimization of the BLDC motor by varies controllers," in *Computer Communication and Informatics (ICCCI), 2012 International Conference on*, 2012, pp. 1-6.

[4] S. Kumar, "Stability analysis of a novel BLDC motor drive for electric scooter application," in *2015 Annual IEEE India Conference (INDICON)*, 2015, pp. 1-6.

[5] T.V.Narmadha. “Design and real-time implementation of control algorithm for Permanent Magnet Brushless DC Motor” *IEEE transactions on industry applications,* vol. 39, pp. 96-104, 2003.

[6] Ahmad Faiz Noor Azam, Auzani Jidin “Current Control of BLDC Drives for EV Application” 2013 IEEE 7th international power engineering and optimization conference

[7] S. Baldursson, "Bldc motor modeling and control-a Matlab®/Simulink® implementation," 2005.

[8] P. Shetty, A. N. Subramonium, and M. S. Kumar, "Mathematical Modeling of Permanent Magnet Brushless DC Motor for Electric Scooter," in *Communication Systems and Network Technologies (CSNT), 2015 Fifth International Conference on*, 2015, pp. 1222-1226.

[9] K. S. M. Al-Hadithi, "Mathematical modeling of permanent-magnet brushless DC motor drives," © Khalid Salih Mohammad Al-Hadithi, 1992.

[10] U. Ansari and S. Alam, "Modeling and control of three phase BLDC motor using PID with a genetic algorithm," in *Computer Modelling and Simulation (UKSim), 2011 UkSim 13th International Conference on*, 2011, pp. 189-194.

[11] R. Dhaouadi, Y. Hori, and H. Xiaoliang, "Robust control of an ultracapacitor- based hybrid energy storage system for electric vehicles," in *2014 IEEE 13th International Workshop on Advanced Motion Control (AMC)*, 2014, pp. 161-166.

[12] M. Haider and N. J. G. Singh, "Position Control of Permanent Magnet Brushless DC Motor using PID Controller," 2011.

[13] J. Larminie and J. Lowry, "Electric vehicle modeling," *Electric Vehicle Technology Explained,* pp. 183-212, 2003.

[14] P. Pal, T. Shubhum, and A. Ojha, "Simulation of Brushless DC Motor for Performance Analysis using MATLAB/SIMULINK Environment," ed: ISSN.

[15] L. Saleh and A. A. Obed, "Speed Control of Brushless DC Motor based on Fractional Order PID Controller," *International Journal of Computer Applications,* vol. 95, 2014.

[16] V. G. TK, A. Gopinath, and S. T. George, "DSP-based Speed Control of Permanent Magnet Brushless DC Motor."

[17] F. Yang, C. Jiang, A. Taylor, H. Bai, A. Kotrba, A. Yetkin*, et al.*, "Design of a High-Efficiency Minimum-Torque-Ripple 12-V/1-kW Three-Phase BLDC Motor Drive System for Diesel Engine Emission Reductions," *IEEE Transactions on Vehicular Technology,* vol. 63, pp. 3107-3115, 2014.