Enervation Sensing and Arouse System

[1] M. Harika

[2] K. Rishita, [3] P. Lakshmi Sai, [4] K. Naga Mounika, [5] Mrs. Jaladi Praveena Rani M.Tech

[1][2][3][4]UG Students, [5] Assistant Professor, KKR & KSR Institute Of Technology & Sciences

Abstract: Road accidents are one of the major causes of demise, injury and disability in both developing and developed countries. Traffic accident related deaths and injuries result in not only real economic losses but also serious physical and mental sufferings. Now-a-days almost everyone is buying the automobiles which in turn increase the road accidents day by day. One of the preventive measures to avoid these types of accidents is to install the enervation sensing kit at vulnerable places. The main theme of our paper is to avoid the road accidents through some automatic actions. We are using the eye blink, alcohol, heartbeat sensors for detection; the user vehicle is fixed with a GSM module and vibration sensor along with microcontroller. Whenever an end user vehicle abut with any accident, the vibration sensor than descry and produces its output. This output is then encounter by the microcontroller. Now the microcontroller transfers this reversal detection signal to the GSM module. GSM module starts transferring the accident data by SMS. We can give any number. For example police number, ambulance number, doctor number, family member's numbers etc. Here we use the LCD module. This module displays the status. Whenever accident happens buzzer will activate and motor gets off when particular action has been taken.

Keywords: Alcohol Sensor, heartbeat Sensor, AT89S52, DC motor, liquid crystal display (LCD), phone number.

1. Introduction

Road accidents are one of the major causes for death. Moreover, the roads are becoming attenuated and the metropolis has become more inhabited. People need to be more vigilant when on the road, no matter which mode of transport you are from. The main theme of our system is to avoid the accidents. To control these road accidents we use safe and secure system without any cause to human. In our system we use the alcohol sensors for detection of alcohol, heartbeat sensor for continuous monitoring of the heartbeat, eye blink sensor for detecting whether the person is in enervation mode or not. In order to make use of this enervation kit first the GPS tracking takes place of the person, then the authorized person need to get accessed with the phone number of a particular person whose is traveling, user vehicle is fixed with a GSM module and vibration sensor along with microcontroller. Whenever an end-user vehicle abuts with any accident, the vibration sensor descry and produces its output. This output is then met by the microcontroller. Now the microcontroller transfers this reversal detection signal to the GSM module. GSM module starts transferring the accident data by SMS. We can give any number. For example police number, ambulance number, doctor number, family members numbers etc. here we also make use of LCD module. This module displays the status. Whenever accident happens buzzer will activate and motor gets off when particular action has been taken.

Today, Internet application development demand is very high. So IOTis a significant technology by which we can build various useful internet applications.Basically, IOT is a mesh in whichall physical objects are joined to the internet through network tools or routers and reciprocity data. IOT allows objects to be controlled remotely across existing network infrastructure.IOTis a very good and intelligent technique which reduces human effort as well as easy access to physical devices. This technique also has autonomous mastery feature by which any tools can control without any human interplay.

As IOT is a upcoming technology so we used this technology in our project. In a lifetime of ten years, from 2020 to 2030, IOT tools will grow from 75 billion to 100 billion, and the improvement from 4G to 5G in terms to fatten IOT is important. Today's 4G network can brace up to 5500 to 6000 NB-IOT tools on a single cell. In the upcoming years, IOT-based technology will proffer advanced extent of services and practically redoing the way people lead their daily lives. Advancements in medicine, power, gene therapies, agriculture, smart cities, and smart homes are just a very few of the categorical examples where IoT is strongly established.

2. Literature Survey

Prabha[1] et al discovered automatic vehicle accident detection and messaging system using GSM and GPS Modem which helps when a vehicle meets with an accident immediately Vibration sensor will detect the signal or if a car rolls over, and Micro Electro Mechanical System sensor will detects the signal and sends it to ARM controller. Microcontroller transmits the vigilant message through the GSM MODEM including the locationto police control room or a rescue team.

Spurti shinde [2] et al did a literature review on an Accident Detection and Alert Systems for Immediate Emergency Services which explains accidents are responsible for a large number of casualties each year. In some cases demise are caused due to lack of immediate medical aid to the clone which can be circumvent with the help of an automated system that will lower the time consumed in activities such as taking the circumvent to the nearby hospital, completing formalities such as filling forms and also presume police in case of crashes. This review compared various algorithms and technologies that have been developed for detecting distinct variety of accidents.

Md. Syedul Amin[3] et al proposed Accident Detection and Reporting System using GPS,GPRS and GSM Technology which utilizes the capability of a GPS receiver to monitor speed of a vehicle and encounter accident basing on track speed and send accident location to an vigilant Service Center. The GPS will track the speed of a vehicle and contrast with the previous speed in every second through a Microcontroller Unit. Whenever the rate is below the particular threshold, it will assume that an accident has taken place. The system will then transmit the accident location obtained from the GPS along with the time and the rate by utilizing the GSM network. This will help to reach the rescue service in time and save the human life.

Gobhinath.S [4] et al an automatic driver drowsiness alert system by using GSM.The author has suggests a System that can be incorporated in every car and if it detects the sleepy driver it must stop the vehicle immediately. It was used to differentiate various road accidents caused by enervation driving and also this system is used for sound purpose of a driver to wariness the driver if any fire accident or any gas leakage. It involved avoiding accident to unplanned

through Eye blink. Here one eye blink sensor is made set in vehicle where if driver lose his perception, then it warns the driver through buzzer to stop vehicle from accident. The alcohol and temperature sensor are used for further welfare of the system in the vehicle. Development of a impure microcontroller for a vehicle which also comprise of an alcohol and temperature detector which will detect if he driver is drunk and would not initiate the vehicle.

3. Existing System

There are some existing methods for accident detection and prevention.The existing system is external system. The driver used to blow air through the device, it indicates whether the person has been drunk or not. While the person is travelling in the vehicle he may face many problems like feeling drowsy, reduction in the heart beat, excess consumption of the alcohol etc. so there would be no one to help the person to overcome the above stated conditions. Hence, there were many problems of the existing system. So, an alternative method has to be developed to overcome these conditions.

Drawbacks in existing system:

- Miss detects the eye corners as the eye centers.
- Low accuracy than features dependency chain.
- Automation is not possible.

4. Proposed System

Here we designed a system called enervation sensing and arouse system that smartly avoids and detects the accidents from happening.The user vehicle is firm with a GSM module and vibration sensor firm with microcontroller. Whenever a end user vehicle abut with any accident, the vibration sensor descry and produces its output. This output is then encounter by the microcontroller. Now the microcontroller transfers this reversal detection signal to the GSM module. GSM module starts transferring the accident data by SMS. We can give any number. For example police number, ambulance number, doctor number, family members numbers etc. here we also make use of LCD module. This module displays the status. Whenever accident happens buzzer will activate and motor gets off when particular action has been taken

Advantages in the proposed system:

- Monitoring and as well as detection is also possible.
- Automation is available.
- No need of Human Interaction.
- Less maintenance.
- No Possibility of Manual Errors.
- Simple & Economical

5. Methodology for proposed system

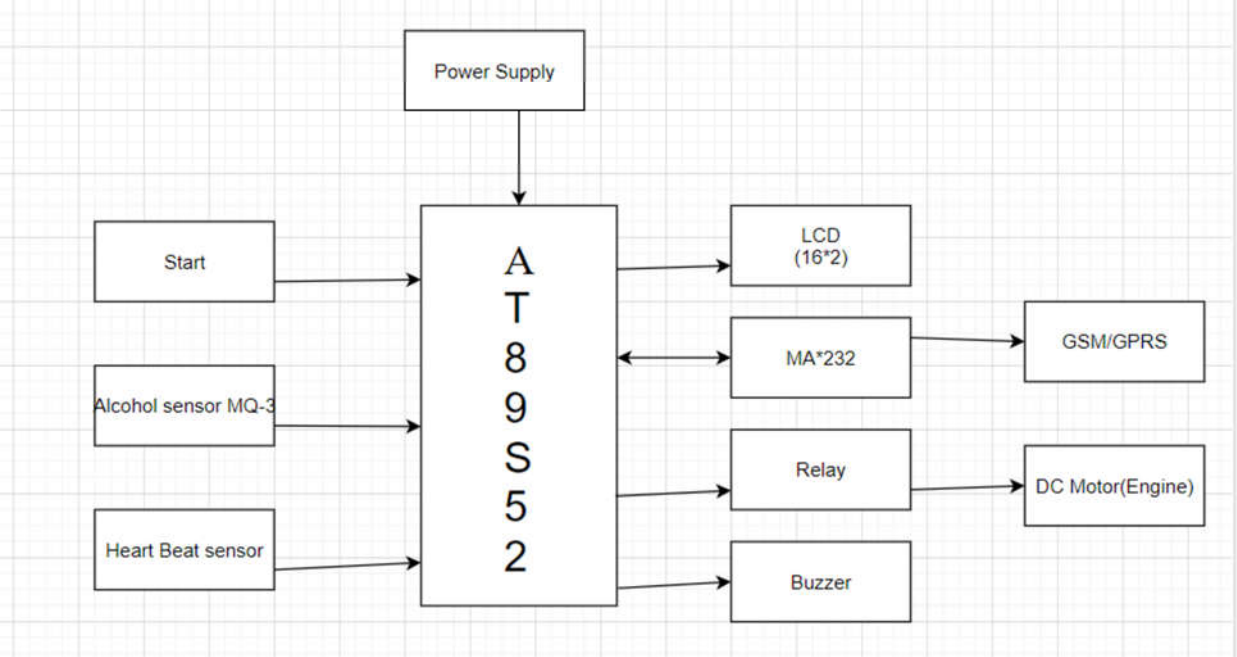

Whenever a end user vehicle abut with any accident, the vibration sensor descry and produces Its output. This output is then encounter by the microcontroller. Now the microcontroller transfers this reversal detection signal to the GSM module. GSM module starts transferring the accident data by SMS. We can give any number. here we also make use of LCD module. This module displays the status. Whenever accident happens buzzer will activate and motor gets off when particular action has been taken.

6. MODULES

The different modules used in our project are:

- Power supply
- Detection module
- Analysis module
- Action module

Power supply

Transformer

Transformers convert AC electricity from one voltage to another with small loss of power. Transformers work only with the AC and this is one of the reasons why mains electricity is AC. Step-up transformers increases voltage, step-down transformer to reduce the dangerously high voltage (230V) to a safer voltage

Relay

A relay is an electrical switch that agape and shuts under the sway of another electrical circuit. In the original form, the switch is working by an electromagnet to agape or shuts one or many sets of contacts. A relay is able to sway an output circuit of more power than the input circuit, it can be considered to be, in a narrower sense, a form of an electrical amplifier.

Detection module

Eye blink sensor: This eye blink sensor is IR based; the differentiation across the eye will vary as per eye blink. The exact behavior depends upon the location and point of the emitter and detector with respect to the eye. If the eye is closed which means that the output is high otherwise output is low. This to know the eye is closing or opening spot. This output is given to LCD. This can be used for project which involves controlling accident due to unconscious through eye blink.

Alcohol sensor: This alcohol sensor is apt for finding alcohol accumulation on your breath, just like your usual breathalyzer. It has a more sensitivity and quicker response time. Sensor provides an analog resistive output based on alcohol accumulation. It has more sensitivity to alcohol and has a diverting resistance to disturbances due to smoke, vapor and gasoline.

Heartbeat sensor: The heartbeat sensor is vile on the principle of phlethysmography. It measures the change in concentration of blood through any organ of the body which turns a change in the light intensity through that organ (a vascular region). In case of applications where heart pulse rate is monitoredthe timing of the pulses is important. The flow of blood volume is decided by the speed of heart pulses and since light is engaged by blood, the signal pulses are comparable to the heart beat pulses.

Analysis Module

AT89S52: Low-power, more-performance CMOS 8-bit microcontroller with 8KB of ISP flash memory. The tool uses Microchip high-density, nonvolatile memory technology and is suitable with the industry-standard 80C51 instruction set and pinout. On-chip flash grants the program memory to be reprogrammed in-system or by a conventional nonvolatile memory programmer. This powerful microcontroller is suitable for embedded control applications.

Liquid crystal display:A liquid crystal display (LCD) is a thin, even display device built of any number of color or monochrome pixels arrayed in front of a light source or reflector. Each and Every pixel abide of a column of liquid crystal molecules dangling between two transparent electrodes, and two polarizing sift, the axes of clash of which are perpendicular to each other.

Action module

Dc motor: If the system detects the accident, system first shuts off the vehicle supply using DC motor without any human interaction.

Buzzer

A buzzer is an audio signaling tool, which may be mechanical, electromechanical, or piezoelectric (piezo for short). The uses of buzzers and beepers include alarm devices, timers, and confirmation of user input such as a mouse click or keystroke.

7. Flow chart

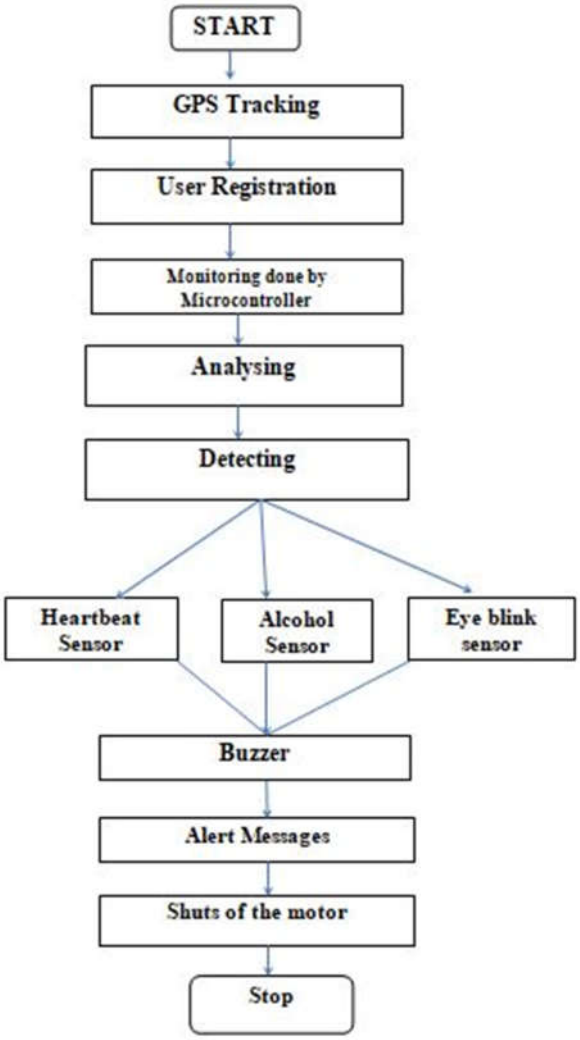

8. Working model & procedure

To overcome the problems of the existing system, the user vehicle is fixed with a GSM module and vibration sensor along with microcontroller. Whenever aend user vehicle abut with any accident, the vibration sensor detects and produces its output. This output is then detected by the microcontroller. Now the microcontroller sends this change detection signal to the GSM module. GSM module starts transmitting the accident data by SMS. We can give any number. For example police number, ambulance number, doctor number, family members numbers etc. here we are also using the LCD module. This module displays the status. Whenever accident happens buzzer will activate and motor gets off when particular action has been taken which means the vehicle gets stopped.

9. Results



Fig 1: tracking GPS data



Fig 2: user registration



Fig 3: sample output indicating the detection of ALCOHOL

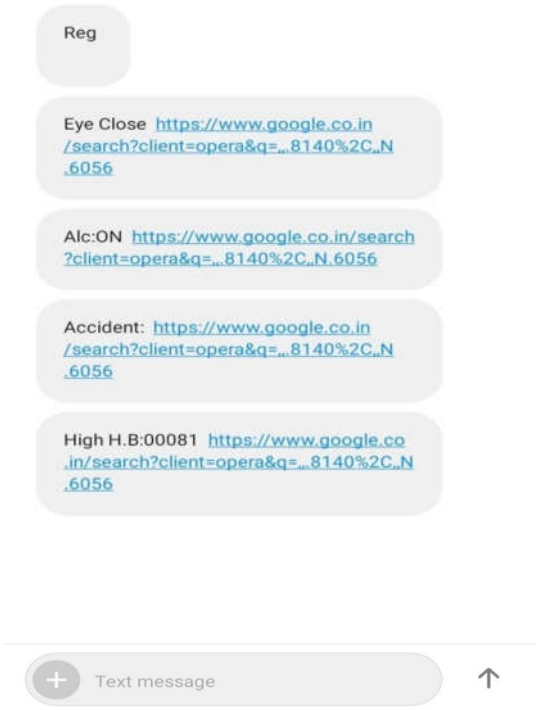

Fig 4: Message Alerts and location tracking

10. Conclusion and Future Scope

The proposed system deals with the accident detection. If the implementation of this concept was described to the modern world then surely there will be reduction in accidents. They can overcome these accidents with the help our project with the heartbeat sensor, it starts monitoring while driving and if any abnormal change in heartbeat is found, then the vehicle gradually decreases the speed and automatically vehicle gets stopped. Alcohol detection was proposed to overcome the drunk and driven by getting messages to the particular member. Arduino is the heart of the system which helps in transferring the message to different devices in the system. Vibration sensor gets activated when the accident occurs and the information is sent to the registered number through GSM module. Using GPS the position can be sent through tracking system to cover the geographical coordinates over the area. The accident can be detected which is used as major module in the system.

The project which we developed gives the accurate result. In future enhancement we would make the effective use of the eye blink sensor. This prototype will be extended to monitor the reflect ray from eye using Nano camera. If the reflection ray is absent, then eye is closed otherwise eye is opened. We believe that this will create a better opportunity to detect drowsiness. However, for every blink the vehicle gets stopped, so to overcome this condition we would implement the number of blinks per hour or required time and makes the vehicle to get stopped by signaling lights. This could definitely make the people to reduce the road accidents.

11. References

[1] Prabha, “Design and Implementation of GSM and GPS Based Vehicle Accident Detection System”, IJIT, Vol 01, Issue 03, pp. 1- 4, 2013.

[2] Spurti shinde , “Automatic Vehicle Accident Detection and Messaging System Using GSM And GPS Modem”, IJAREEIE, Vol. 3, Issue 7, pp. 1-5, 2014.

[3] Md. Syedul Amin [3], “Car Accident Detection System using Gps, Gsm and Bluetooth” in IJERGS May-June 2015.

[4] Gobhinath.S, “Vehicle Accident Detection and Reporting System using Gps And Gsm.”, IJERGS, Vol- 10, Issue 4, pp.-2528, April 2014.

.