VOLTAGE QUALITY IMPROVEMENT IN DISTRIBUTION NETWORK USING CUSTOM POWER DEVICE

***Raj Barvadiya[1], Prof. V.N. Modi[2] & Prof. Sangani Vivek Kumar D[3]**
[1] PG Student, [2] Associate Professor, [3]Assistant Professor
[1, 2, 3] Department of Electrical Engineering
*[1, 2] LD College of Engineering, Ahmedabad, Gujarat, India, [3]*Dr. Subhash Technical Campus, Dr. Subhash Marg, Near Majewdi Gate via Junagadh, Gujarat, India.

1

barvadiyaraj007@gmail.com*,[2]vipulnmodi69@gmail.com,[3]sangani.vivek33@gmail.com

Abstract: The most observable topic in electrical engineering is the major problem is voltage sag and swell. The voltage power quality in present scenario. The occurrence of power quality problem in power network is done by using nonstandard voltage, frequency and current that result in a failure of end use equipment. The distribution network in occurs sag and swell are main parameter on which the improvement is must be needed. Voltage quality can be sufficiently improved in distribution electric power system by using a custom power device such as a dynamic voltage restorer (DVR). The Dynamic Voltage restorer (DVR) is fast, flexible and efficient solution to mitigate the voltage sag and voltage swell problems.

Keywords: DVR, Power System, PCC, Resonant Controllers, Closed loop Control Dynamic voltage restorer (DVR), power quality, voltage harmonics, voltage sag, voltage swell.

1. Introduction

The power systems are complex networks, in recent years the most common problem in power system is power quality. Power quality mainly depends on distribution system. The power quality is affected many problems which occur in transmission system and distribution system. Where hundreds of generating stations and thousands of load centers are interconnected through long power transmission and distribution networks. The primary requirement of consumers is the quality and reliability of power supply at various load centers is located. The power generation in some of the developed countries is very reliable; the quality of the supply is not so reliable [1].

The Voltage magnitude is one of the major factors that determine the quality of electrical power. In a present scenario distribution system is directly related to the power quality. The reason behind is that distribution system locates at the end of the power system and is directly connected to the customer. Because most of the electrical distribution network failures account for about 90% of the average customer interruptions and if any disturbance occur in the distribution system a huge amount of financial losses may happen with the consequent loss of productivity and competitiveness. [3]

The distribution systems in large number of nonlinear loads are connected, which directly affect to the quality of power supply. In the result of the nonlinear load, the purity of the waveform of supply is lost. Producing the many power quality problems Apart from nonlinear loads some system events; motor starting, both capacitors switching.

The power quality problems such as voltage sag, voltage swells, Voltage Fluctuation, Voltage Unbalance, Transients, Frequency Variations, Interruptions and harmonics etc. Voltage sag and swells are considered the most severe disturbances to the industrial equipment such as motor drive. The electronic equipment's are very sensitive loads against harmonics because their control is depending on peak value and zero crossing value of supplied voltage. They are regulating the all harmonic distortion [2].In three phase system voltage sag by nature are three phase event,

which is the effect to the phase -to -phase voltages and phase-to-ground voltages both Power-quality in during fault condition, lightning strikes and other problems that affect to the line-voltage and current waveforms.

The recent advancements in power electronic devices, there are many possibilities to reduce these problems in the power system. One of them is the use of Flexible AC Transmission System (FACTS) devices. The connection of these devices in the power system helps in improving the power quality and reliability. Use of these FACTS devices like STATCOM, SSSC, IPFC and UPFC etc. all FACT device design for the improvement of power quality in transmission system. But now improvement of power quality in distribution system it is also known as custom power device. The main custom power device used for the power quality improvement is DSTATCOM, DVR, AF and UPQC etc. [3]

2. Location of DVR

The power quality problems (sags, swells, harmonics etc.) can be overcome by using the concept of custom power devices which is introduced recently. One of those devices is the Dynamic Voltage Restorer (DVR), which is the most efficient and effective modern custom power device used in power distribution networks. The location of DVR is as shown in the Fig.1 DVR is a recently proposed series connected solid state device that injects voltage into the system in order to regulate the load side voltage. It is normally installed in a regulate the load side voltage. It is normally installed in a distribution system between the supply and the critical load feeder at the point of common coupling (PCC). Other than voltage sags and swells compensation, DVR can be also added to other features like: line voltage harmonics compensation, reduction of transients in voltage and fault current limitations [1, 4].

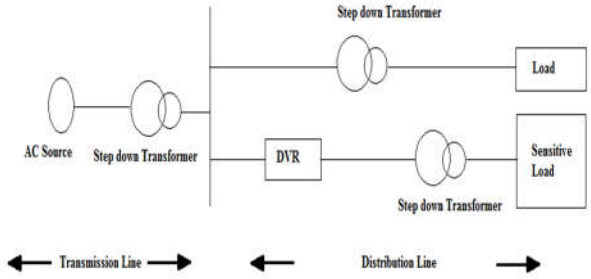

Fig-1 Location of DVR [1]

3. Basic Structure of DVR

Dynamic Voltage Restorer (DVR)

A Dynamic Voltage Restorer (DVR) is a series connected solid state device that injects voltage into the system in order to regulate the load side voltage.

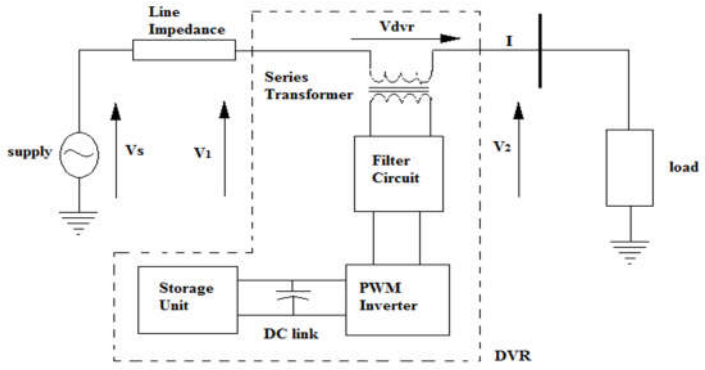

Figure 2 –Series Connected DVR [1]

The DVR was first installed in1996. It is normally installed in a distribution system between the supply and the critical load feeder. Its primary function is to rapidly boost up the load-side voltage in the event of a disturbance in order to avoid any power disruption to that load. There are various circuit topologies and control schemes that can be used to implement a DVR. In addition to voltage sags and swells compensation, DVR can also added other features such as: line voltage harmonics compensation, reduction of transients in voltage and fault current limitations. The general configuration of the DVR consists of an Injection / Booster transformer, a Harmonic filter, a Voltage Source Converter (VSC), and a Control and protection system as shown in Figure 2.

Injection / Booster Transformer

It consists of two side voltage one is high voltage side and other is low voltage side. The high voltage side is normally connected in series with the distribution network while the power circuit of the DVR is connected to the low voltage side. The DVR transfer the voltage which is required for the compensation from DC side of the inverter to the distribution network through the injection transformer [3].

Harmonic Filter

The main task of harmonic filter is to keep the harmonic voltage content generated by the voltage source converters to the permissible level (i.e. eliminate high frequency switching harmonics).It has a small rating approximately 2% of the load MVA.

Voltage Source Inverter

A voltage source inverter is a power electronic device consisting of a switching device and a storage device such as battery. VSI can generate a sinusoidal voltage at any required magnitude, phase and frequency. VSI is used to temporarily generate the part of the supply voltage that is missing. IGBT is the newer compact switching device that is used with VSI for DVR operation [5].

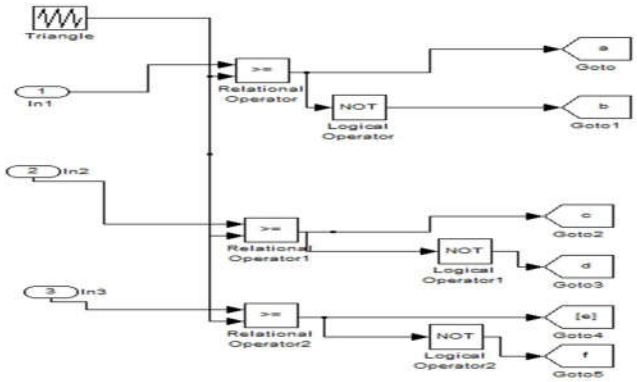

Fig: 3 Pulse generation

Switching Devices

There are four main types of switching devices: Metal Oxide Semiconductor Field Effect Transistors (MOSFET), Gate Turn-Off thyristors (GTO), Insulated Gate Bipolar Transistors (IGBT), and Integrated Gate Commutated Thyristors (IGCT). Each type has its own benefits and drawbacks. The IGCT is a recent compact device with enhanced performance and reliability that allows building VSC with very large power ratings. Because of the highly sophisticated converter design with IGCTs, the DVR can compensate dips which are beyond the capability of the past DVRs using conventional devices.

Storage Devices

The capacity of the DC Energy Storage Unit determine the duration of the sag which can be compensated by the DVR [4]. The DC Energy Storage Unit has two main tasks [4].

1) The first task is to charge the energy source after a sag compensation event.

2) The second task is to maintain dc link voltage at the nominal dc link voltage.

Control Unit

The control unit is detect any disturbance in the supply voltage and compares with the reference

Value. Then this unit generates switching pulses for the semiconductor switches of VSI. The semiconductor switches are then operated according to these switching pulses in order to generate three phase voltages for the compensation [7].

The Synchronous Reference Frame (SRF) Theory (dq0 Transformation or PARK's Transformation). The park's transformation is used to control of a DVR. The dq0 method gives the sag depth and phase shift information with start and end times. The compensation for voltage sags using a DVR can be performed by injecting or absorbing the reactive power or the real power. When the injected voltage is in quadrature with the current at the fundamental frequency, the compensation is made by injecting reactive power and the DVR is with a self-supported dc bus. However, if the injected voltage is in phase with the current, DVR injects real power, and hence, a battery is required at the dc bus of the VSC.

4. Control of DVR With BESS for Voltage Sag & Swell

Fig: 4 shows a control block of the DVR in which the SRF theory is used for reference signal estimation. The voltage sat the PCC vs and at the load terminal VL are sensed for deriving the IGBTs' gate signals. Load voltages (VLa, VLb, VLc) are converted to the rotating reference frame using abc−dqo conversion using Park's transformation with unit vectors (sinθ, cosθ) derived using a phase-locked loop as

$$\begin{bmatrix} vLq \\ vLd \\ vLo \end{bmatrix} = \frac{2}{3}\begin{bmatrix} \cos\theta & \cos\left(\theta - \frac{2\pi}{3}\right) & \cos\left(\theta + \frac{2\pi}{3}\right) \\ \sin\theta & \sin\left(\theta - \frac{2\pi}{3}\right) & \sin\left(\theta + \frac{2\pi}{3}\right) \\ \frac{1}{2} & \frac{1}{2} & \frac{1}{2} \end{bmatrix}\begin{bmatrix} vlaref \\ vlbref \\ vlcref \end{bmatrix}$$

Similarly, reference load voltages (V *La, V *Lb, V *Lc) and voltages at the PCC Vs are also converted to the rotating reference frame.

$$\begin{bmatrix} v*dvra \\ v*dvrb \\ v*dvrc \end{bmatrix} = \begin{bmatrix} \cos\theta & \sin\theta & 1 \\ \cos\left(\theta - \frac{2\pi}{3}\right) & \sin\left(\theta - \frac{2\pi}{3}\right) & 1 \\ \cos\left(\theta + \frac{2\pi}{3}\right) & \sin\left(\theta + \frac{2\pi}{3}\right) & 1 \end{bmatrix}\begin{bmatrix} v*Dq \\ v*Dd \\ v*D0 \end{bmatrix} . (2)$$

Reference DVR voltages (v* dvra, v* dvrb, v* dvrc) and actual DVR voltages (vdvra, vdvrb, vdvrc) are used in a pulse width modulated (PWM) controller to generate gating pulses to a VSC of the DVR. The PWM controller is operated with a switching frequency of 10 kHz.

5. Operating Principle of DVR

The basic function of the DVR is to inject a dynamically controlled voltage VDVR generated by a forced commutated converter in series to the bus voltage by means of a booster transformer. The momentary amplitudes of the three injected phase voltages are controlled such as to eliminate any detrimental effects of a bus fault to the load voltage VL. This means that any differential voltages caused by disturbances in the ac feeder will be compensated by an equivalent voltage generated by the converter and injected on the medium voltage level through the booster transformer. The DVR has two modes of operation which are: standby mode and boost mode. In standby mode (VDVR=0), the booster transformer's low voltage winding is shorted through the converter. No switching of semiconductors occurs in this mode of operation, because the individual converter legs are triggered. such as to establish a short-circuit path for the transformer connection. Therefore, only the comparatively low conduction losses of the semiconductors in this current loop contribute to the losses. The DVR will be most of the time in this mode. In boost mode (VDVR>0), the DVR is injecting a compensation voltage through the booster transformer due to a detection of a supply voltage disturbance.

6. Simulation

In order to show the performance of the DVR in voltage sags and swells mitigation, a simple distribution network is simulated using MATLAB (fig.1).Voltage sags and swells are simulated by temporary connection of different impedances at the supply side bus. A DVR is connected to the system through a series transformer with a capability to insert a maximum voltage of 50% of the phase to ground system voltage. Apart from this, a series filter is also used to remove any high frequency components of power. In this simulation the In-Phase Compensation (IPC) method is used. The load considered in the study is a 5.5 MVA capacity with 0.92 p.f., lagging.

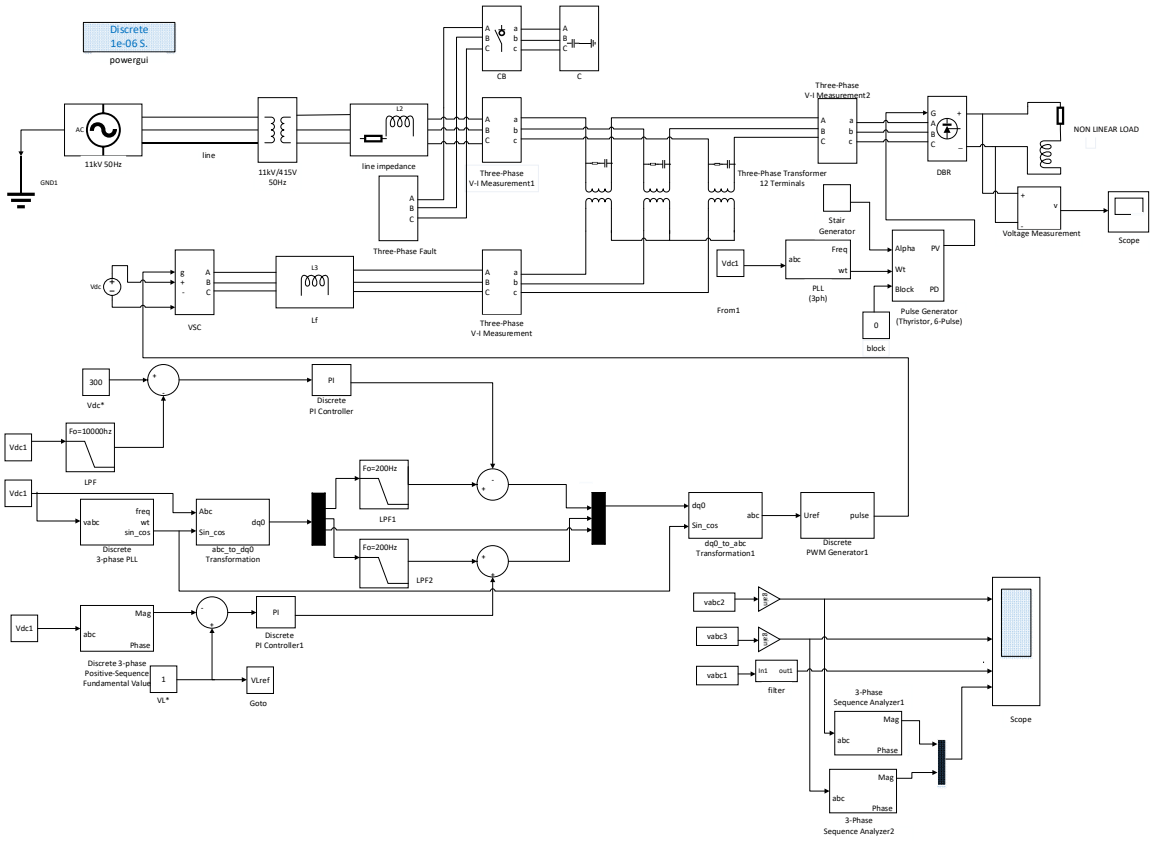

Fig – 4 Simulink model of Three phase Fault with DVR

Sr. No	System Quantities	Standards
1	Source	3-phase, 13kV, 50Hz
2	Inverter parameters	IGBT based,3 arms ,6Pulse, Carrier Frequency=1000 kHz , Sample Time= 1 µs
3	RL load	Active power = 1KW ,Inductive Reactive Power=500 VAR
6	Two windingTransformer	Y/Y 11kv/415V

Voltage Sags&Swell

A case of Three-phase voltage sag is simulated and the results are shown in Figure 5. In this case, we assume that there is a 30% three-phase voltage sag with +30° phase jump in phase-a in supply voltage that is initiated at 0.1s and it is kept until 1.8 s. Fig.5 shows the result of voltage sag compensation.

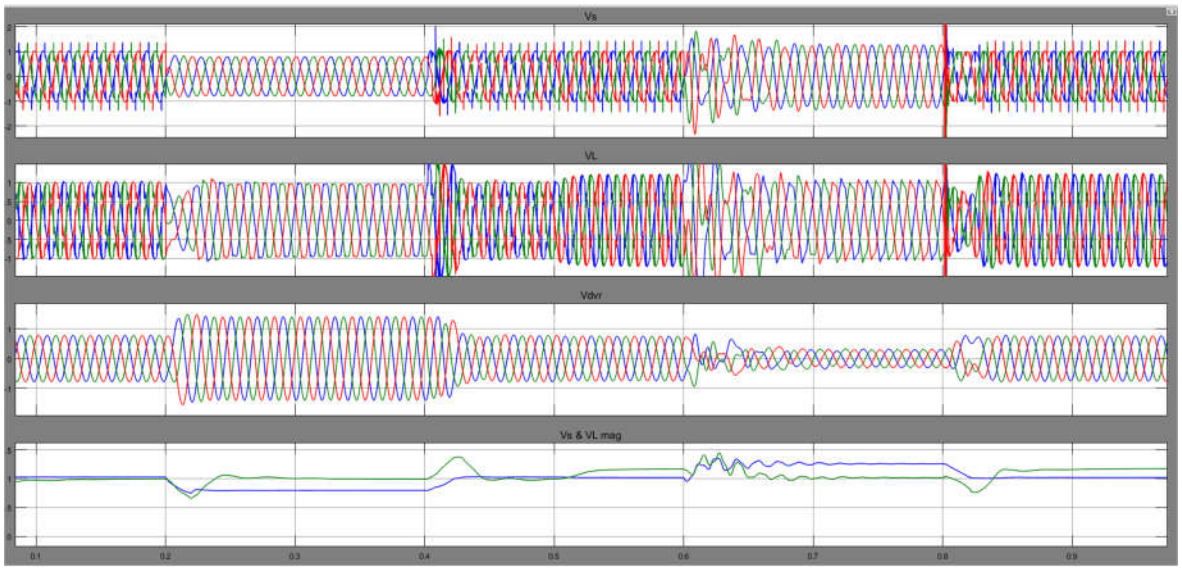

Fig – 5 Three phase Fault with DVR Input voltage, DVR voltage, and Output voltage

7. Conclusion

Power quality measures can be applied both at the user end and also at the utility level. This paper has presented models of custom power equipment, namely DVR, applied them to mitigate voltage dip which is very prominent as per utilities are concerned. Though conventional techniques are available, the proposed devices are very fast acting and efficient.DVR is considered to be an efficient solution due to its relatively low cost and small size, also it has a fast dynamic response. The simulation results show clearly the performance of a DVR in mitigating voltage sags and swells. The DVR handles both balanced and unbalanced situations without any difficulties and injects the appropriate voltage component to correct rapidly any anomaly in the supply voltage to keep the load voltage balanced and constant at the nominal value.

8. REFERENCES

1] Mr.Y.Prakash," Power Quality Improvement Using DVR in Power System" 2014 Power and Energy Systems, IEEE 978-1-4799-3421-8/14/$31.00 - (2014)

[2] Pudi Sekhar,"Power Quality Enhancement using Custom Power Devices" international Electrical Engineering Journal (IEEJ), Vol. 3, No. 2, pp. 745-750, ISSN 2078-2365, (2012).

[3] Dr Kondapalli .S.Varaprasad, "Comparison and Analysis on the Role of D-STATCOM and DVR with PI Controller to improve the power Quality in Distributed Networks" International Research Journal of Computer Science (IRJCS), Volume 1, ISSN: 2393-9842 (October 2014),

[4] Sanjay Haribhai Chaudhary,Mr. Gaurav gangil," Mitigation of voltage sag/swell using Dynamic voltage restorer (DVR)" IOSR Journal of Electrical and Electronics Engineering (IOSR-JEEE), e-ISSN: 2278-1676, p-ISSN: 2320-3331, PP 21-38, Volume 8, Issue 4 (Nov. - Dec. 2013),

[5] Swapnali Hazarika, Swagata Singha Roy, Rahul Baishya" Application of Dynamic Voltage Restorer in Electrical Distribution System for Voltage Sag Compensation" The International Journal of Engineering and Science (IJES), volume-2, ISSN (e): 2319 – 1813 ISSN (p): 2319 – 1805, (2013)

[6] P.R.Giresh, M.Varun Kumar" Voltage Quality Improvement Using DVR" International Conference on Recent Trends in Information, Telecommunication and Computing, IEEE 978-0-7695-3975-1/10 $25.00, DOI 10.1109/ITC.2010.80, (2010)

[7] Chirag H. Raval, "An Overview of Various Control Techniques of DVR" 2014 International Conference on Circuit, Power and Computing Technologies [ICCPCT], IEEE, 978-1-4799-2397-7/14/$31.00 (2014)

[8]Jenamani Pravas Kumar Chhotaray, Rudra Narayan Pradhan, "A STUDY OF VOLTAGE PROFILE IMPROVEMENT USING DVR" International Conference on Information Technology, 2017 IEEE DOI 10.1109/ICIT.2017.50 (2017)

[9]Patrick Taiwo Ogunboyo , Remy Tiako, and Innocent E. Davidson, Senior . "Effectiveness of Dynamic Voltage Restorer for Unbalance Voltage Mitigation and Voltage Profile Improvement in Secondary Distribution System" canadian journal of electrical and computer engineering, vol. 41, 0840-8688 © 2018 IEEE

[10]S.Sathish Kishore, Sushant Kumar Sinha, Mrs.P.Abirami, Mrs. Merin Lizbeth George "Voltage Sag Reduction and Power Quality" International Conference on Computation of Power, Energy, Information and Communication (ICCPEIC) 978-1-5090-4324-8/17/$31.00 © IEEE (2017).