ISLANDING DETECTION TECHNIQUES FOR DISTRIBUTED GENERATION BASED ON LOCAL DETECTION METHODS

***Mayur R. Prajapati[1], Prof. Mihir Rameshkumar Vasavada[2]**
[1]M.E Scholar, [2]Assistant Professor
[1,2]Department of Electrical Engineering
[1,2]L.D. College of Engineering, Ahmedabad, Gujarat, India
[1]mrprajapati980@gmail.com, [2]mihir75@gmail.com*

Abstract: *In modern power system, the use of non-conventional energy resources is highly recommended and this scenario makes us to add distributed generation in our power system. As we add it some unfavourable situations are also being integrated with our power system such as Islanding. Due to Islanding event there are many problem occur in systems like safety hazards for lineman, Reduction of equipment's life and reduction in power quality in system. So to mitigate these problems due to islanding event we required to detect immediately and give tripping signal to targeted DG. In this paper Islanding condition is analysed for one system which consist of wind based distributed generation system of two 9 MW wind farms each consist of six units of doubly fed induction generator having capacity of 1.5MW each .various condition like symmetrical fault and non islanding event like normal, load switching and DG tripping are analysed based on sequence components methods all the events have simulated on MATLAB/SIMULINK model.*

Keywords: Islanding detection, distributed generation (DG), sequence component.

1. Introduction

In modern power system, the use of non-convention energy resources like photo-voltaic cell, wind turbine are highly recommended and this scenario makes us to add distributed generation in our power system. There are some advantages of distributed generation in our system are Reliability flexibility. It also reduced loading of T &D equipment security etc. But as we add the distributed generator some unfavourable situation are also being integrated with our system such as Islanding event. The definition of Islanding According to IEEE std. 1547[5] "a condition in which a portion of an area EPS (Electric Power System) is energised supplied by one or more local EPS through the associated PCC (point of common coupling) while that portion of the area EPS is electrically separated from the rest of the area EPS"

Due to islanding event there are many problems occurs in the system like safety hazard for lineman, life reduction of equipment due to over and under voltages, reduction in power quality in power system and when distribution system is reconnected to power system, generators are not likely to remain in synchronism at instant of reconnection which loads to retrieving of the system. It will create disturbance in system. So, to mitigate this problem due to islanding event we required to detect immediately and give tripping signal to targeted DGs. According to IEEE1547-2003 standard [5], the DG disconnection is required within 2 seconds after utility disconnection.

So, for detection of islanding event there are many methods available at present. In communication base techniques. Status of circuit breakers are monitored by SCADA system .The advantage of this technique is its accuracy but it is too expensive and more complex in comparison with other techniques. There are also techniques based on local

detection method which are 1. Active method 2. Passive method. In active method, a small disturbance is to be injected in system .The main advantage of this method is that it has very small non detection zone but it injects disturbance which affects quality of power .In the passive techniques, some changes in quantity like current, voltage, frequency are to be measured. This method has quick response but it has very large non detection zone and nuisance tripping. Best technique for detection of islanding has to have les complexity, less expensive, minimum disturbance, minimum non detection zone and no nuisance tripping.

In this research the passive methods are being studied, which observes the rate of change of sequence components.

2. Method For Islanding detection

An unbalanced three-phase system can be resolved into three balanced systems by following three symmetrical components [12]

1) Positive Sequence component:
   This is the balanced three-phase system with the same phase sequence as the original sequence and it is denoted by subscripts 1.

2) Negative sequence component:
   This is the balanced three-phase system with the opposite phase sequence as the original sequence. It is denoted by subscripts 2.
3) Zero Sequence component:
   In this system three phasors are equal in magnitude and phase. It is denoted by subscripts 0.

Figure 2.1illustrates set of three unbalanced phasors that are resolved into the three sequence components. Here original set of three phase phasor are denoted by I_a , I_b and I_c , and their positive, negative and zero sequence components are denoted by the subscripts, 1,2 and 0 respectively

.

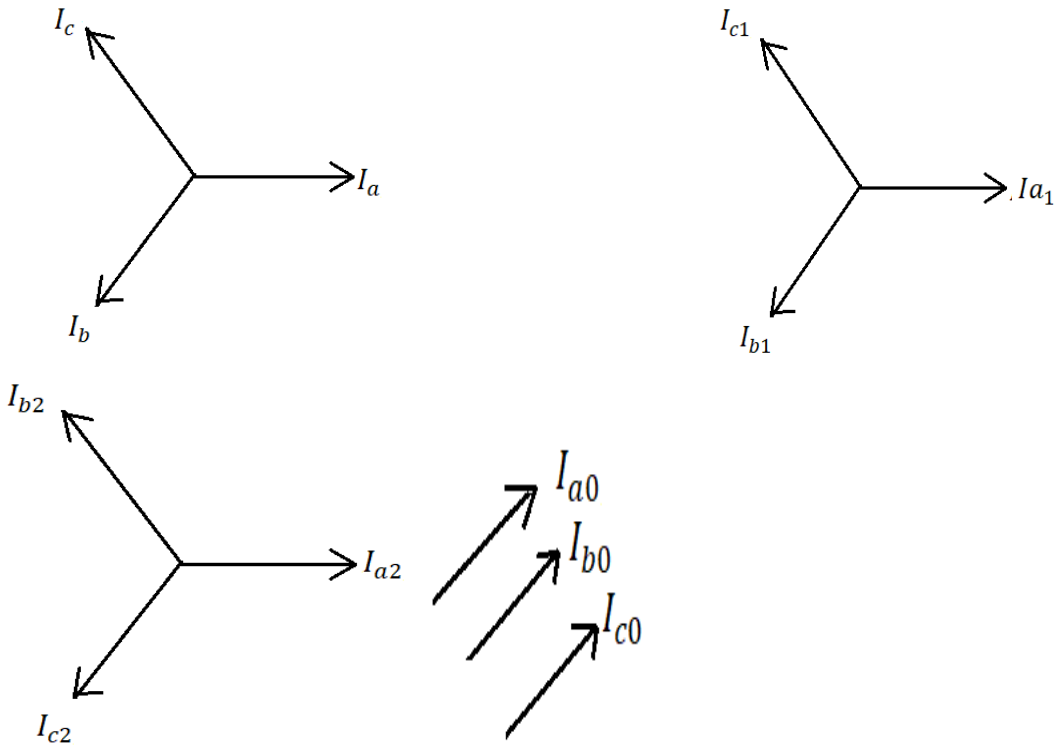

Figure 2.1 Positive, negative and zero sequence phasor of current

Let operator $\alpha = e^{j120}$

$= 1\angle 120$

= -0.5+j0.86

$$\begin{pmatrix} I_{a1} \\ I_{a2} \\ I_{a0} \end{pmatrix} = \frac{1}{3}\begin{pmatrix} 1 & \alpha & \alpha^2 \\ 1 & \alpha^2 & \alpha \\ 1 & 1 & 1 \end{pmatrix}\begin{pmatrix} I_a \\ I_b \\ I_c \end{pmatrix}$$

Where $I_a, I_b \; and \; I_c$ are phase quantities of current in ampere and $Ia_1, I_{a2}, and \; Ia_0$, are positive, negative and zero sequence component of current in ampere respectively.α is constant and its value is $1\angle 120^0$.

Now positive sequence component of current

$$Ia_1 = \frac{I_a + \alpha I_b + \alpha^2 I_c}{3}$$

Negative sequence component of current

$$Ia_2 = \frac{I_a + \alpha^2 I_b + \alpha I_c}{3}$$

Zero sequence component of current

$$Ia_0 = \frac{I_a + I_b + I_c}{3}$$

Proposed islanding detection method is based on negative sequence component of current at targeted DG source. So negative sequence component of DG source current is observed for all possible cases and based on its value for all possible cases critical value C for islanding is determined to detect islanding. Flowchart for proposed method is illustrated in figure 2.2

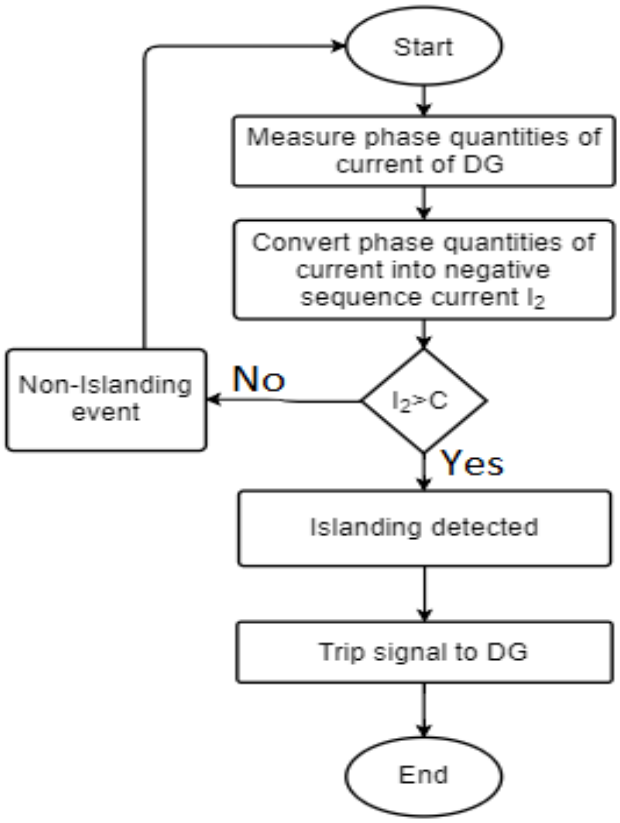

Figure.2.2 Flowchart for islanding detection.

3. System Configuration

Figure 3.1 shows proposed system on which islanding event is investigated. It consists of two wind-based DG source. Each DG source consists of 6 units (DFIG-doubly fed induction generator) and each unit can generate 1.5MW. Both DG source is connected to

main grid through distribution transformer and 30KM PI transmission line. Load L1 and load L2 are connected near DG source side [10] [13].

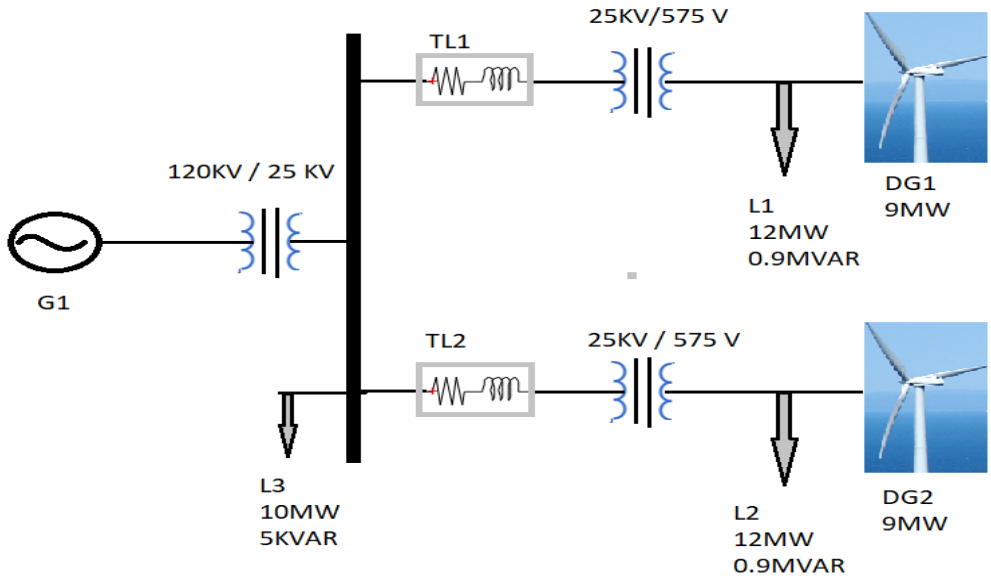

Figure 3.1 Single line diagram of proposed system

4. Matlab Simulation

Proposed system as shown in figure 3.1 is implemented on MATLAB/SIMULINK. Sample time is 50e-6 second and at 50 Hz frequency. Wind speed is kept constant at 11m/s. fault breaker is activated during 0.40 to 0.45 seconds. Generator G1 is Modeled as constant voltage source since it is connected with main grid having Infinite power capacity.Phase quantity of current of DG is converted into negative Sequence current by using sequence analyser tool in Simulink.

Negative sequence current I_2 is measured at DG1 for following possible cases of Islanding events

A) Normal
B) Symmetrical fault (LLL, LLLG)
C) Unsymmetrical fault (LL, LLG, LG)
D) Load switching (8MW, 0.9MVAR)
E) Grid switching
F) Dg2 tripping

Figure 4.1 shows MATLAB implementation of proposed system and figure 5.10 shows subsystem model to measure negative sequence current from phase quantities of DG current by using sequence analyser tool.

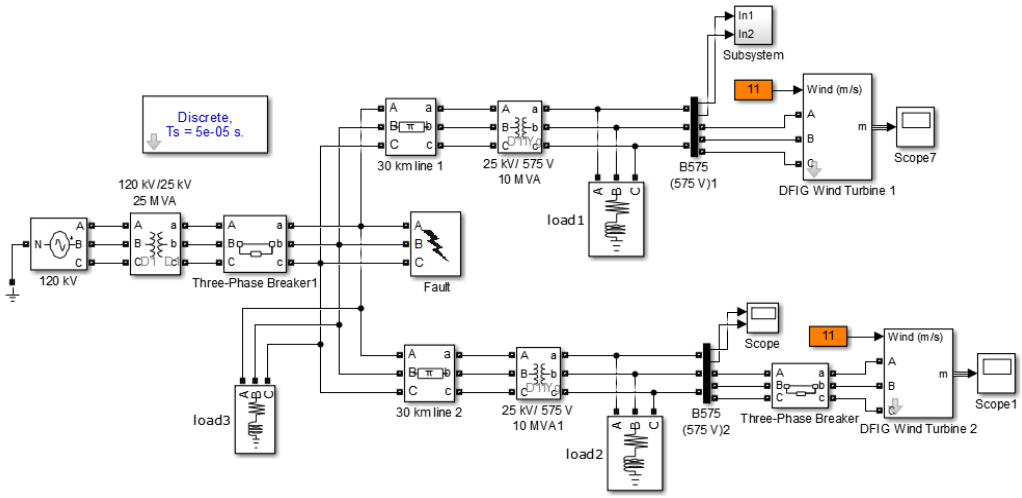

Figure 4.1. Simulink model of proposed system.

5. Results

Figure 5.1 shows result for normal condition. X-axis represents time in second and Y-axis represents negative sequence current I_2 in ampere.at t=0 all breaker are closed so starting peak of I_2 is due to breaker closing at t=0s.

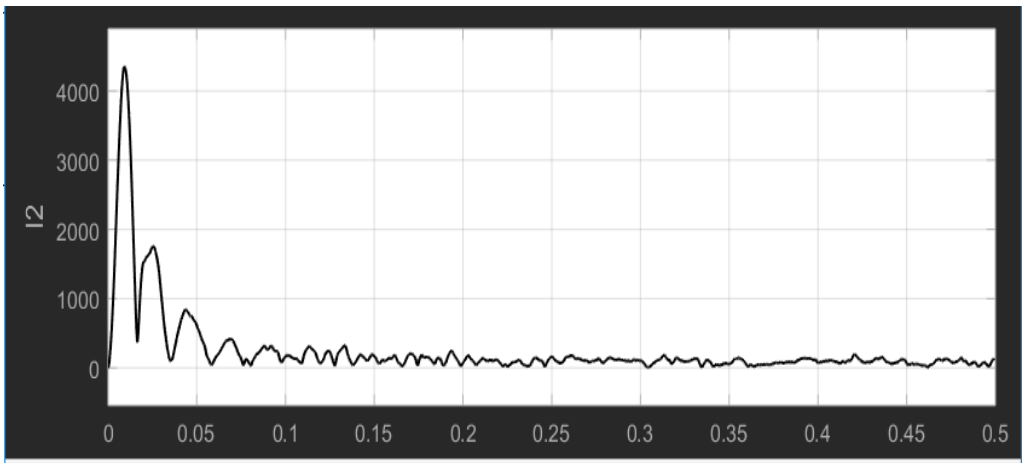

Figure 5.1 Negative sequence current I_2 for normal condition.

Fig 5.2 and Fig 5.3 shows results for symmetrical fault (LLL, LLLG) at t=0.4 s to t=0.45 s.

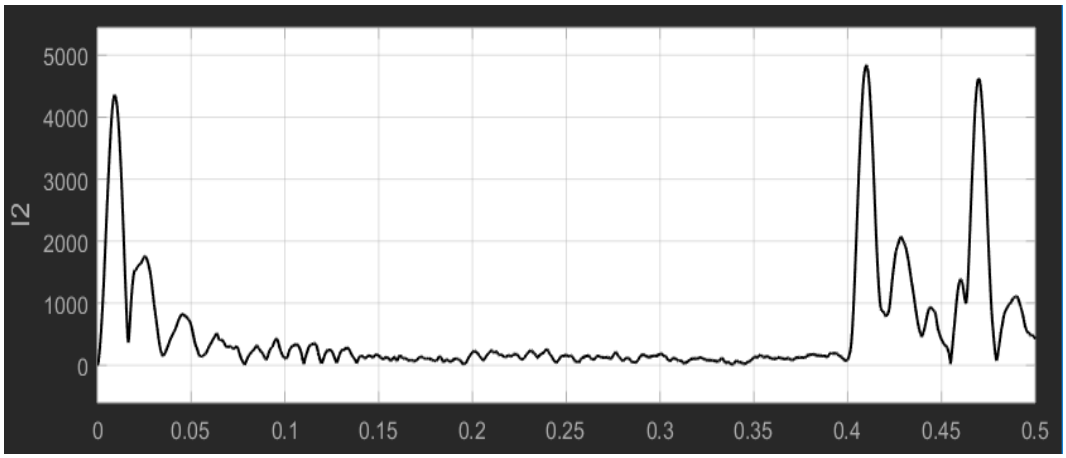

Figure 5.2 Negative sequence current I_2 for LLLG fault.

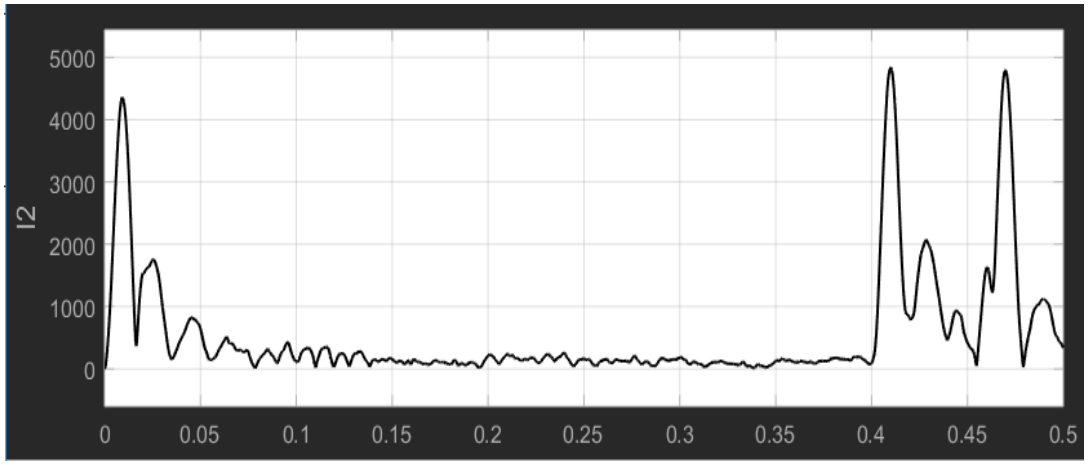

Figure 5.3 Negative sequence current I_2 for LLL fault.

Fig 5.4, 5.5, and 5.6 shows results for unsymmetrical fault (LL, LLG, LG) at t=0.4 s to t=0.45 s.

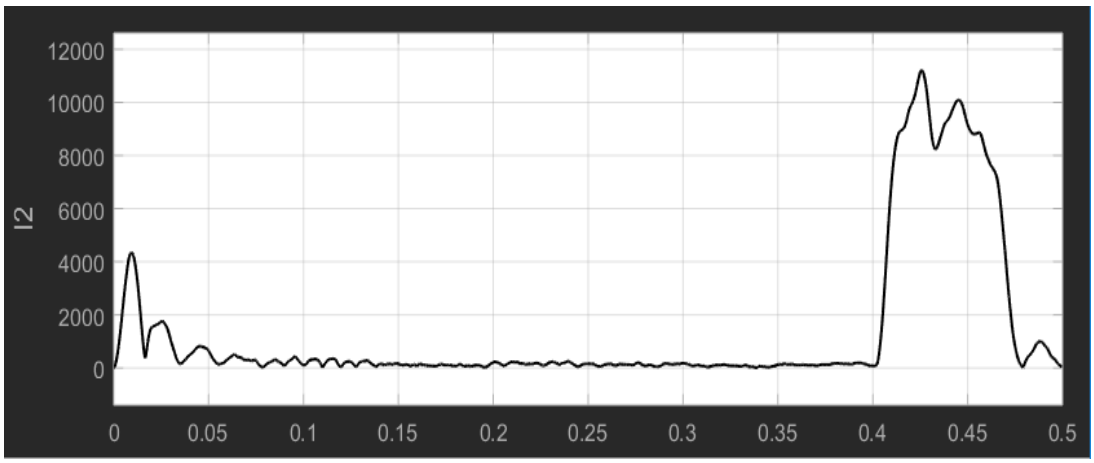

Figure 5.4 Negative sequence current I_2 for LL fault.

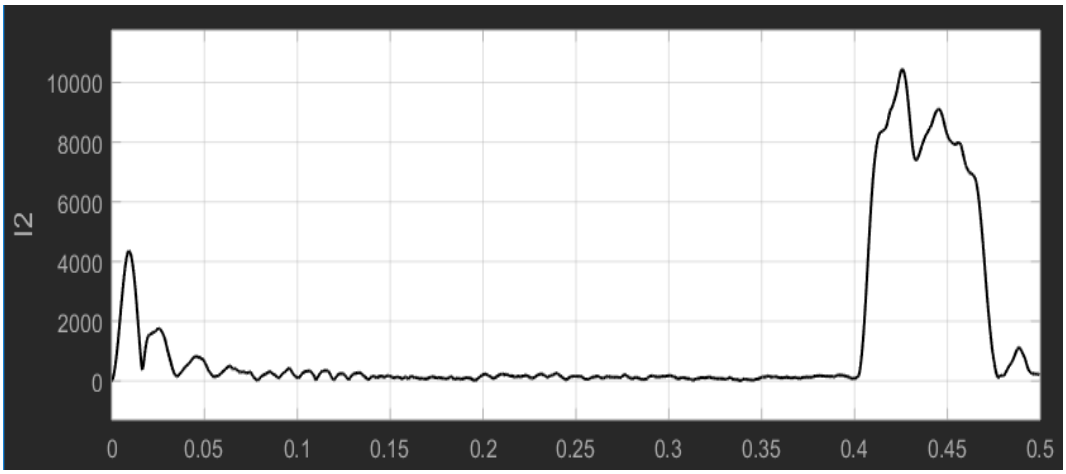

Figure 5.5 Negative sequence current I_2 for LLG fault.

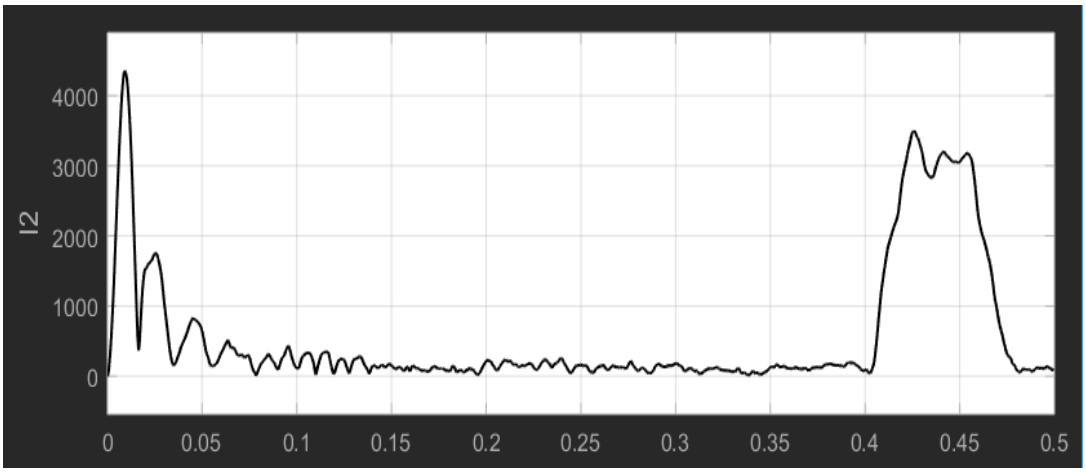

Figure 5.6 Negative sequence current I_2 for LG fault.

Figure 5.7, 5.8 and 5.9 shows results for grid switching, load switching and DG2 tripping at t=0.4 s to t=0.45 s.

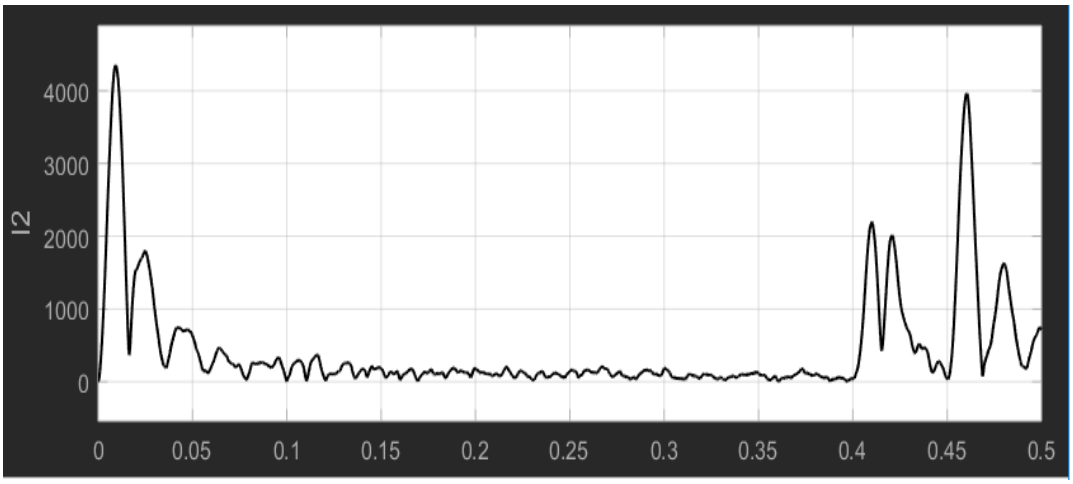

Figure 5.7 Negative sequence current I_2 for grid switching.

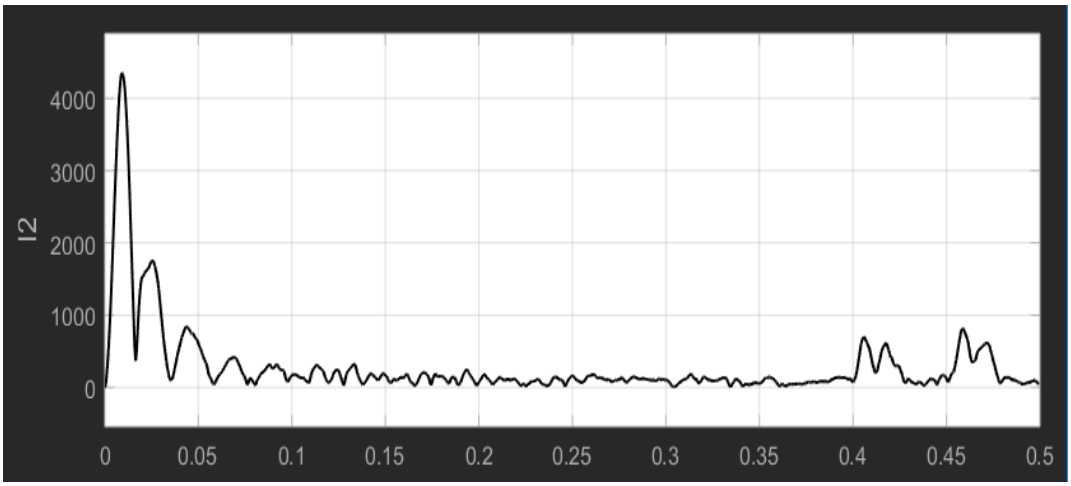

Figure 5.8 Negative sequence current$I_2$for load switching.

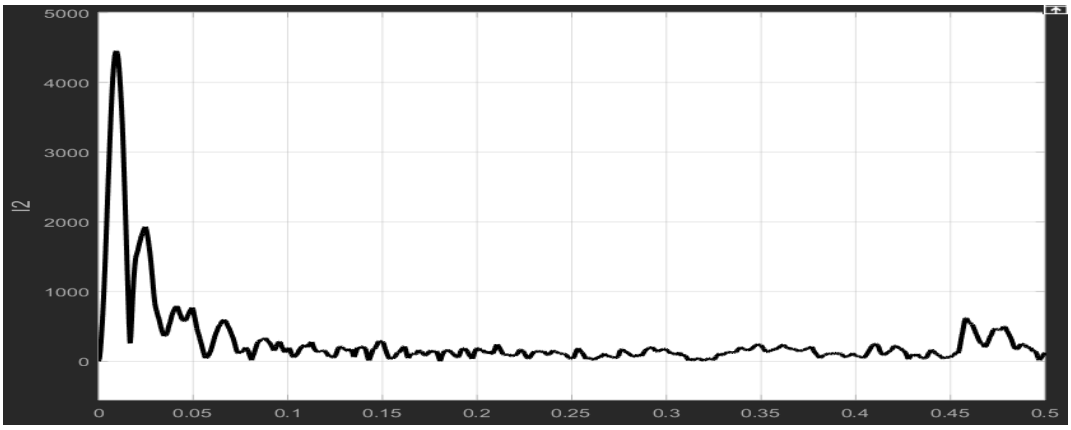

Figure 5.9 Negative sequence current I_2 for DG2 tripping.

6. DISCUSSION

Islanding event is analyzed for different cases. MATLAB simulation results gives the data that for various symmetrical faults, asymmetrical faults and grid switching value of negative sequence is very high as compared to healthy condition .Results of load switching and DG tripping shows that negative sequence current is not too much high , so there is no problem like nuisance tripping .

7. Conclusion

Existing islanding detection technique suffers from various problems like high implement cost, nuisance tripping and non detection zone. Proposed technique for islanding detection which is based on sequence component which is more reliable than other techniques.

8. Acknowledgement

I wish to thanks my guide Prof Mihir Rameshkumar Vasavada for his inspiration and continuous support.Without his valuable advice and assistance, it would not have been possible for me to attain this landmark. He has always been willingly present whenever I needed the slightest support from him.I would not like to miss a chance to say thanks for the time that spared for me, from his extremely busy schedule.

REFERENCES

[1] Banerjee, R., "Comparison of options for distributed generation in India," Energy Policy, 34, 101–111(2006).

[2] SN SINGH, JACOB OSTERGAARD and NAVEEN JAIN "Distributed Generation in Power Systems: An Overview and Key Issues" IEC

[3] Philip P. Barker, Robert W. de Mello ''Determining the Impact of Distributed Generation on Power Systems'' Power Technologies, Inc.

[4] Muhammad Aslam, Anwar Ali, Irfan Ahmed, Zubair Ahmed, Sada Bakhash ''Impact of Distributed Generation on Network Short Circuit Level''

[5]IEEE Standard 1547-2003: 'Interconnecting Distributed Resources into Electric Power Systems', July 2003

[6]Karan sareen, Bhavesh R. Bhalja, Rudra prakash Maheshwari "Universal islanding detection technique based on rate of change of sequence components of currentsfor distributed generations"IETJournals-2015

[7]Abhishek sharma, Dr. sunita R. "unintentional islanding detection in micro grid" International Conference on Energy, Communication, Data Analytics and Soft Computing (ICECDS-2017)

[8]Zhihong, Y., Kolwalkar, A., Yu, Z., et al.: 'Evaluation of anti-islanding schemes based on non-detection zone concept', IEEE Trans. Power Electron., 2004, 19, (5), pp. 1171–1176

[9]Maki, K., Kulmala, A., Repo, S., et al.: 'Problem related to islanding protection of distributed generation in distribution network'. Proc. Power Tech 2007 Conf., Lausanne, Switzerland, 1–5 July 2007, pp. 1–6

[10] Abhishek Mishra, Premalata Jena "superimposed Positive Sequence Voltage and Current based Isalnding Detection Techniques for Microgrid'' IEEE 2017

[11] An Assessment of DG Islanding Detection Methods and Issues for Canada July 2004 CETC-Varennes 2004-074 (TR) 411-INVERT.

[12] D P Kothari, I J Nagrath "modern power system analysis".

[13] Shwetha C, kavitha K. M, Satyanarayan rao R.D "Islanding Detection Analysis in Wind Turbine Units Based on Voltage, Frequency and Negative Sequence Components" International Journal Of Engineering And Computer Science ISSN:2319-7242 Volume 3 Issue 6 June, 2014 Page No. 6598-6504