Design and Fabrication of Two Wheeler Hybrid Bike

Rohan Choudhary[1*], Saurav Sharma[2], Vishal Kardam[3] and Robin Singh [4], Manish Saraswat[5], R K Shukla[6]

[1, 2,3,4] *B.Tech Student, ABES Engineering College, Ghaziabad, Uttar Pradesh, India*

[5]*Associate Professor, Department of Mechanical Engineering, ABES Engineering College, Ghaziabad, Uttar Pradesh, India*

[6]*Professor, Department of Mechanical Engineering, ABES Engineering College, Ghaziabad, Uttar Pradesh, India*

[1*]**rohan.16bme1123@abes.ac.in.**

Abstract:

In these days pollution increases day by day due to high use of internal combustion engines which releases nitrogen oxide, sulphur oxide, etc. These emissions hardly effect the environment which also a reason for depletion of ozone layer. Our project is basically to reduce the pollution and increase the efficiency of the bike by using two source for running the vehicle. First is on IC engine and second is on battery motor engine. This system use a manual relay circuit which shift the control of engine to battery operation. By using the fuel to operate vehicle the vehicle we can charge the battery by using an alternator. The battery can charge by using two methods using an alternator as well as plug in charging.

This hybrid two wheeler system used for –

- **Increasing mileage.**
- **Reducing pollution.**
- **Decrease rate of using fuel.**
- **Easy in maintenance.**
- **Easy to use.**

Keywords: **Hybrid Alternator, Design, Fabrication**

1. Introduction

The use of two different sources can help In making the vehicle efficiency high due to which using a single source can affect the diminishing of the fuel but if we use many source like by runs the vehicle with petrol and by electrically can helps in making by saving the fuel. Also if runs the vehicle with the battery operation can also helps to save the environment by decreasing the pollution of petroleum type two wheeler by using the vehicle for some time with the battery and by charging the battery it can be reuse In the battery mode.

For the future aspect this project has a place where it can be used for most of the time because of the pollution and reduction in fossil fuel.

We design a two wheeler which can run with petrol and can charge the battery by using an Altenator. The battery we charge is a li-ion battery that can helps in running the motor which we can operate the vehicle by using a motor. The system we use is hybrid which the two wheeler can save the fuel when it run on the motor and can also help in increasing mileage.

By reducing the use of the petrol while driving it in the electric mode motor runs the vehicle and increase the average of the vehicle. [1, 4-6].

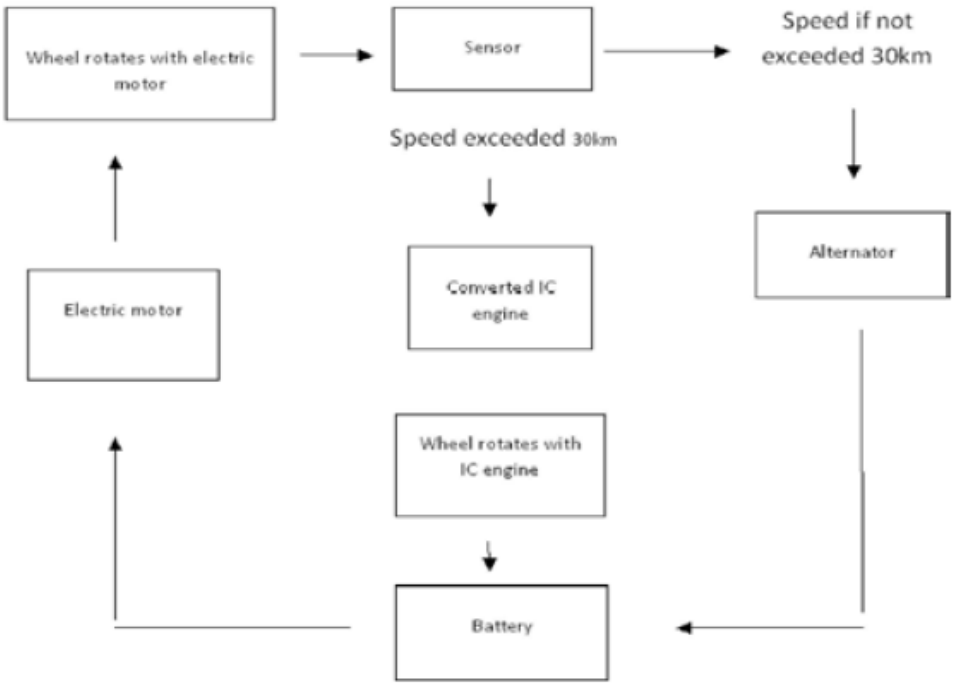

Fig. 1: Working of hybrid system [1]

1.1 Selection of components

After examination the components can be selected on the basis of requirement of our project.

- Battery
- Speed controller
- Hub motor
- Alternator
- Charging kit

All these components have to select on basis of some physical test and mathematical calculations which helps in selecting components much easier.

2. Design

Our design of the vehicle is that we use an Alternator which use for charging the battery while running .The alternator which we use for our project is depend on the specification of motor and battery which can be charge and the battery life is approx. 3 to 4 years which helps that the battery can be charge for many cycles.

The engine can be independently runs with both either petrol or battery. The engine specification also reason for motor which we use in our vehicle that can meet the vehicle specification and to bear the load to run the vehicle.

3. Calculations

3.1 Hub motor calculation:-

Motor specification:-

RPM =1000

VOLTS = 48V

POWER =750W

Power Eq. :-

P=V*I

I=P/V=750/48

I=15.625 A

Torque calculation:-

T = (P*60)/2*3.14*N

= (750*60)/2*3.14*1000

= 7.165 N-m

Hence torque of wheel hub motor T= 7.165N*m

3.2 Power requires to drive the vehicle:-

Total Weight=100 + (70*2) = 240kgf

Total resistance= Rolling resistance. + Air resistance. + Gradient resistance.

R = KRW +KA AV2+Wsinθ

= (0.018*240) + (.0028*302 *.635*.9) + (240*sin 0)

= 5.76 kgf

=56.4863N

POWER = 56.4863*8.33/.9 =523 W

Hence, the power required to propel the wheel is 532W , which is just Below our motor specification 750W.Hence design is safe.

4. Fabrication of vehicle

In my project we fabricate a two vehicle from single operated to multi operated vehicle .By which we use the li-ion battery in the two vehicle or bike that can be added according to the space in the vehicle have in surplus.

We charge the battery by an Alternator and the process is that;

ENGINE RUNNING

↓

ALTENATOR RUNS BY ENGINE

↓

BATTERY CHARGE BY THE ALTENATOR

Due to this we have a possibility that engine efficiency will increase because the running of vehicle is in two mode that when engine run on petrol then engine moves and charge the battery further the battery will help to run the hub motor which is the another running source and this will help in making the vehicle use for economy mode. Which will lead to fuel saving when vehicle runs on battery mode.

5. Working principle

Basically the working principle of hybrid vehicle can only be define in three process in which the process one where the vehicle operates with help of the IC engine ,process second where an electric motor is used to drive the vehicle , and process three where vehicle used both process when they required.

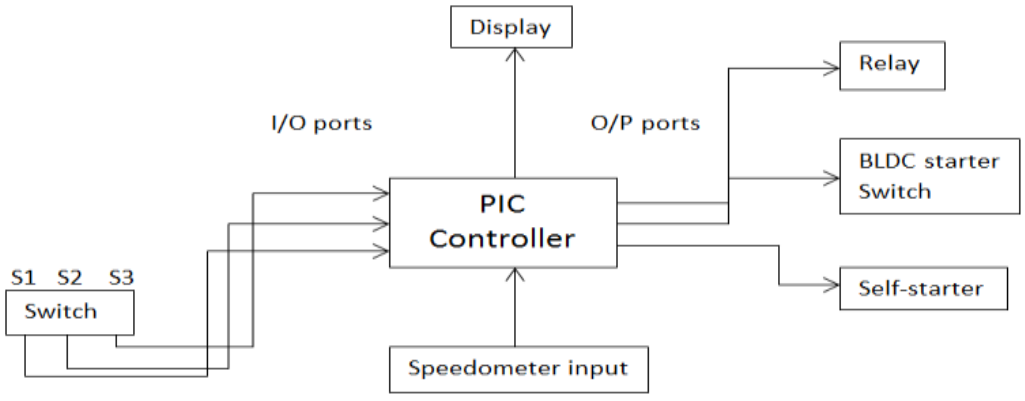

Fig. 2: Working of hybrid system [2]

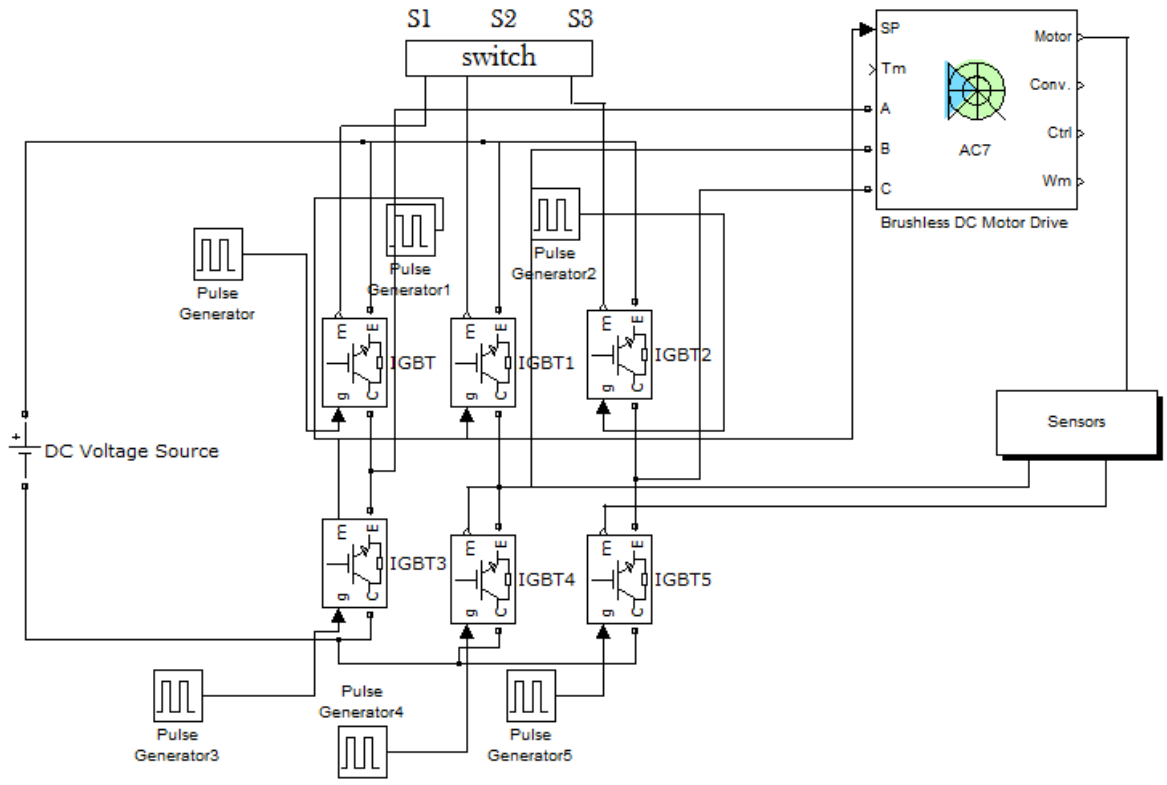

Fig. 3: BLDC circuit diagram [2]

5.1. IC Engine mode

In I.C mode, the internal combustion engine will supply sufficient amount of power into the rear wheel by the use of petrol as fuel. When the switch is click on this mode, the microcontroller will sense the clicking of the switch and gives transmits signals to the relay, which will power the ignition coil and operate the starter motor. The rider can easily run the vehicle on this below the speed of 40km/hr by the use of ordinary accelerator handle. In this mode simply combustion engine generate the power supply to the rear wheel to run on the road.

5.2 Electric motor mode

In this mode, we are using BLDC hub motor, which is capable running with help of battery power source. The motor are fixed on the rear wheel of the vehicle and it is able to control through the control unit which inserted on handle of the vehicle. The hub Motor act as a standard drive conversion which are generally in e-rickshaw and the other e-bikes.

Basically the hub motor will work with help of an alternator. And the alternator is the useful device which is used to convert the amount of mechanical energy to the electrical energy by itself. And the electric power supply is charged to the battery through the separate charger. Now, here we also have some losses which may be occurred due to friction.

5.3 Hybrid mode

This is an uncommon sort of mode where rider couldn't care less about the current method of activity. This is altogether constrained by microcontroller. In this mode switch will be in S3 position. Microcontroller is customized as when the vehicle is running in 30kmph or not as much as that, electric mode will be enacted. In the event that it is above 30kmph, at that point petroleum mode is to be worked. To detect the speed of the vehicle, we are going to accept speedometer readings as info. At city constrains the vehicle works in electric mode and in external it will work in petroleum mode. In this manner we can lessen the vitality utilization, contamination, rupees per kilometre.

6. PERFORMANCE RESULT TABLE -

S.NO	Content	Petrol	Electric	Hybrid
1	Source	Ic engine	Battery	Dual
2	Drive	Engine	Hub motor	Dual
3	Maximum speed	55	45	45-50
4	Maximum torque	4.5nm	4.77nm	4.9nm
5	Mileage	50-55 km	45-50 km	95km(appx)
6	Emission	Yes	No	Very low
7	Pulling in up hills	Fair	Poor	Good

Table 1: Performance Table [3]

7. Conclusion

In traffic fuel is saved by running the vehicle in the electric mode that run by battery because in traffic there al vehicles are moves slow due to which more fuel is consume in traffic to avoid it by running vehicle in electric mode which helps in saving fuel and doing less pollution also increase efficiency .Therefore the average or mileage of the vehicle will be increase. The idea of this hybrid two-wheeler technology are very popular and interesting now a days and it will surly help to increase the efficiency of the vehicle up to by 50% by its km of running on road. And as we compare to ordinary bikes it is more efficient and more economic. This hybrid two-wheeler will the innovative idea in the automobile era. And this Hybrid vehicle is the better solution for increasing fuel cost day to day as well as in future. So, the concept of this project is used to create pollution free environment and increasing the overall efficiency of the vehicle.

REFERENCESE

[1] . S. Vanangamudi, S. Prabhakar,C. Thamotharan and R. Anbazhagan, "Hybrid Two Wheeler",Middle-East Journal of Scientific Research 20 (6): 726-727, 2014

[2]. N.Boopalan , Marlon Jones Louis , A.K.Nachimuthu , "DESIGN AND FABIRCATION OF HYBRID TWO WHEELER" , International Journal of Research and Innovation in Engineering Technology ISSN: 2394 – 4854Volume: 01 Issue: 01

[3]. Balasubramani N, Hari prasath S, Jagadeesh Kumar A, Karna Prakash S, Karun prasath D,"FABRICATION AND PERFORMANCE ANALYSIS OF HYBRID TWO WHEELER", International Research Journal of Engineering and Technology (IRJET) e-ISSN: 2395-0056 Volume: 05 Issue: 03

[4]. Manish Saraswat, Nathi Ram Chauhan, Vijay Kumar Sharma, R K Shukla and Kamal Sharma,"Assessment of Biomass Potential in Engine Emission Reduction",Journal of Scientific & Industrial Research Vol. 79, January 2020, pp. 77-80

[5]. Harivans Pratap Singh, Priti Dimri, Shailesh Tiwari and Manish Saraswat,"Segmentation Techniques through Machine Based Learning for Latent FingerprintIndexing and Identification",Journal of Scientific & Industrial Research Vol. 79, March 2020, pp. 201-208

[6]. Manish Saraswat and Nathi Ram Chauhan, “Environmental Impact of Butanol and Algae Oil addition in Gasoline at different Compression Ratio”. Journal of Scientific & Industrial Research, Vol. 78, June 2019. (Impact factor: 0.735).