Design and Implementation of DC Drive using PIC16F877A Microcontroller for Electrical Vehicle

Prof. N. D. Mehta
Assistant Professor
Vishwakarma Government Engineering College, Chandkheda
Ahemadabad - India
ndmehta@vgecg.ac.in

Dr. A. M. Haque
Assistant Professor
Vishwakarma Government Engineering College, Chandkheda
Ahemadabad - India
amhaque@vgecg.ac.in

Dr. M. K. Shah
Associate Professor
Vishwakarma Government Engineering College, Chandkheda
Ahemadabad - India
mkshah@vgecg.ac.in

***Abstract*—** An Electric Vehicles (EV), also referred to as an Electric Drive Vehicle (EDV), is a vehicle which uses one or more electric motors for propulsion. Electric Vehicles (EVs) have recently emerged globally as a favored technological option for combating oil dependency, petroleum price volatility, air pollution and climate change emissions in the transport sector. An Electric Vehicle (EV), also referred to as an Electric Drive Vehicle (EDV), is a vehicle which uses one or more electric motors for propulsion. Depending on the type of vehicle, motion may be provided by wheels or propellers driven by rotary motors, or in the case of tracked vehicles, by linear motors. EVs depend on which called electric propulsion, in which an Electric Motor is used to drive the vehicle instead of the Internal Combustion Engine (ICE) and the energy sources are batteries, fuel cells, or capacitors instead of gasoline or diesel fuel in the conventional ICE vehicles. Thus, Power Electronics Technology (PET) plays an important role in the Electrical Propulsion System (EPS)in order to efficiently drive the electric motor of the vehicle and control the power converters and the associated electronic circuits. In recent world, electrical equipment's like DC motor, AC motor, transformer etc. are the most common devices. In many industries as well as domestic applications, the dc motors are needed to be operated either on variable speed or constant speed along with its forward and reverse operation. In this paper, the digital controller-based control for DC drives is presented for the effective control of the output, when there is a sudden change in the input parameters. An assembly language program has been built for the programmable PIC16F877A microcontroller which controls the various functions of DC drive. The main objective of control is to get the desired output and keep the motor or drive safe in case of any fault occurred. Initially microcontroller has been used for the gating purpose for power electronics switches. Introducing a microcontroller-based scheme facilitates the new DC drive system to deal with the various changes in the system and helps in maintaining the safe operation of the system.

.

Keywords- Electric Motor Drive Control, PWM Technique, Electrical Vehicle Application, Duty Cycle, Microcontroller.

*****

I. INTRODUCTION

Now there are great concerns on Green House Gas (GHG) emissions in the whole world, deployment of zero/low emission cars can surely help in reducing GHG emission, hence the developments of Electric and Hybrid Vehicles have accelerated in a number of car manufacturer companies.

Purely Electric Vehicles usually referred as Battery Electric Vehicles (BEV) basically have zero GHG emission and should have better impacts in terms of reducing GHG. However, generally BEVs seem to have lower popularity due to the main reason that their range and acceleration performance are far behind the Internal Combustion Engine (ICE) powered cars. Therefore, before a great breakthrough in battery technology, Hybrid Electric Vehicles (HEV) are good compromise between performance and environment protection.

In fact, as of the end of 2017, over a million HEVs have been sold worldwide. This paper will review and comparison different possible configurations of HEV currently being in different car manufacturers and will predict the possible directions of development of HEV in the near future.

The Technical Committee 69 (Electric Road Vehicles) of the International Electrotechnical Commission (IEC) suggested that an HEV is a vehicle in which propulsion energy is available from two or more kinds or types of energy stores, sources or converters and at least one of them can deliver electrical energy [1]. Based on this there many types of HEV.

However, in order to limit the scope of discussion in this paper, we will only discuss those HEVs which have an ICE and electric motor(s) in their driving chain. Even with this simplification, there are still many ways one can arrange the relative positions (in terms of driving chain topology) of the ICE and the electric motors(s) in the HEV.

An ordinary ICE car uses its maximum kW power rating only for about 1 % of the time [2]. The large engine put on more weight and fuel consumption. In addition, when ICE operates under highly varying load conditions, its overall energy efficiency will be greatly reduced.

On the other side, an HEV usually has a smaller ICE. The ICE can operate under less varying load; hence can be optimized for efficiency, While the electric motor can assist when required (or in some conditions) to power the car. In addition, regenerative braking can be applied to recover energy during braking or down-slope driving; these further improve the fuel economy of the car. [3]

As an example, on an impressive fuel consumption value of HEV, Toyota Prius Hybrid (2004-2009 model) achieved 4.0 litre/100 km in City driving cycles, and 4.2 litre/100 km in Highway driving cycles (source: Natural Resources Canada EnerGuide 2006).[4]

II. Review of Electrical Vehicle

The main challenge for HEV design is on how to manage multiple energy sources, which is highly dependent on driving cycles, ICE sizing, battery sizing, motor sizing, and battery management. The ultimate aim is to maximize the efficiency of the whole driving system, while providing reasonable (as compared with ICE car) performance in terms of acceleration, range, dynamic response, comfortless, etc.

The configurations of drive chain of HEV can be roughly divided into 3 types: Series, Parallel and Complex HEVs

1) *Series HEV*: it can be regarded as a simple extension of BEV by adding an ICE (as shown in Figure 1) to charge the battery set in order to extend the driving range of the vehicle, hence it eliminates one of the major drawbacks of BEV. The configuration is just like diesel-electric locomotives used in railway systems. [5]

   Usually, the ICE is kept in off mode in urban driving, in order to reduce the GHG emissions in city centers. In this case, the power to the motor is only from the battery.

   Of course, the converter has regeneration capability, much that significant amount of energy can be recovered during down-slope driving and braking. This not only enhances the fuel economy; it also extends the lift the braking system.

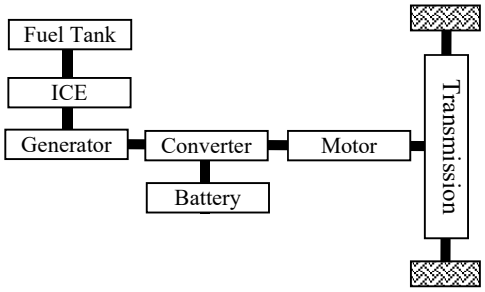

Figure 1: Series HEV

   The ICE is turned on only when the battery energy storage level is low or in country side driving. In this case, as shown in Figure 1, the converter can divert the power from the generator to the motor or the battery or both, depends on the power demand of the motor.

   In general, the control strategy is that: the ICE is operating at a more-or-less constant output power level such that its efficiency is maximum, the surplus power will be used to charge the battery when the power demand of the motor is lower than the generator output power.

   On the other hand, when the power demand of the motor is higher than the output power of the generator, all the power from the generator will be used to drive the motor, plus additional power from the battery to meet the need of the motor.

   Therefore, the ICE is either off or operates at its highest efficiency point, and hence greatly improves the fuel economy of the vehicle as compared with conventional ICE. The power rating of the ICE-generator set can be designed differently depends on the application characteristics of series HEV.[6]

   Examples of series hybrids include the Renault Kangoo Elect'Road (2003), Toyota's Japan-only Coaster light-duty passenger bus, Daimler AG's hybrid Orion bus, the Chevrolet Volt (Figure 2) production car and the Opel Flextreme concept car.



Figure 2: Chevrolet Volt, a Series HEV

2) *Parallel HEV*: it parallels the mechanical power outputs from the electric motor and the ICE to drive the transmission, as shown in Figure 3. There are a number of control strategy can be used for parallel, one of the common ways is: the ICE is basically always in on mode and operates at almost constant power output at maximum efficiency point. [7]

   When the demand power from the transmission is higher than the power output of the ICE, the motor will be turn on and supplement the difference in power.

   When the demand of the transmission is lower the power output from the ICE, the motor will become a generator and the surplus power will be used to charge the battery set.

   In this way, this can be regarded as an electric-assisted ICE vehicle; the electric motor is simply acting as a buffer to smooth the appeared loading to the ICE, such the ICE can maintain at almost constant output power level of maximum efficiency, such that it greatly improves the fuel economy.

   Again, regenerative conversion in down-slope driving and braking can be applied in this type of vehicle to charge the battery.[8]

   The Insight model, a three-door hatchback car (Figure 4), introduced by Honda in 1999 is a specific implementation of parallel HEV. Other examples are: Ford Escape Hybrid SUV and Lexus Hybrid SUV.

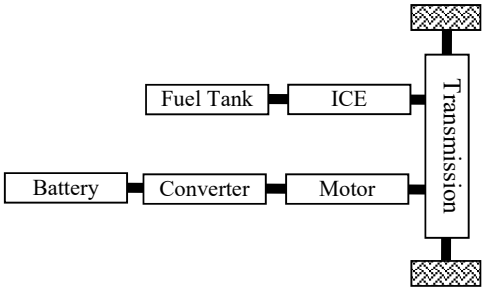

Figure 3: Parallel HEV

When comparing series HEV and parallel HEV, series one needs 3 rotating machines (ICE, generator and motor), while parallel one needs 2 only (ICE and motor). The other advantage of the parallel one over the series is that: the parallel HEV needs a smaller ICE and a smaller motor for the same vehicle performance (in terms of peak acceleration and maximum up-slope capability), as at maximum power/maximum torque output, the ICE and motor are operating in parallel to provide the power/torque together.[9]



Figure 4: Honda's Insight, a Parallel HEV

For long trip operation, in all types of HEVs (except plug-in hybrid, which will be discussed later), all the consumed energy ultimately is from the on-board fuel tank. For series hybrid, one can see that the number of conversions from the fuel tank to the transmission (by the ICE, then by the generator, then by the motor) is more than that of parallel hybrid (by ICE only). This suggests that parallel hybrids should have a better fuel economy in long range operation.[10]

On the other hand, the mechanical design of the transmission design of parallel HEV is far more complicated than series HEV, as it needs to accept 2 mechanical inputs (with one of this is bidirectional) and one mechanical output (again bidirectional). In addition, the location of the ICE in series HEV is more flexible, as it is decoupled mechanically from the transmission. [11]

3) *Complex HEV*: all other configurations different from the above two types of series and parallel HEV can be referred as complex HEV, hence there are many variations within this type. All these variations try to compensate for some of the drawbacks in the above 2 types of HEV with some additional complications and cost. Three sub-types will be discussed below:

3a) *Series HEV with peak-power unit*: This is a simple extension of the series HE. In series HEV, in order help the motor to cope with the peak power/torque requirements without using a large motor, a flywheel may be added and coupled to the output of the motor (say, via continuous variable transmission), as shown in Figure 5. This is referred as Series HEV with peak-power unit. [12]

3b). *Series/parallel HEV*: by adding an additional mechanical linkage and a generator between the ICE and converter in a parallel HEV will allow both series and parallel operations of the ICE and the motor, as shown in Figure 6, and hence results in series/parallel HEV. Obviously, it allows for more flexible operations, but it is also complicated in structure and costly in price. The popular Toyota Prius (model NHW20, 2004-2009, as shown in Figure 7) adopted this configuration [13]

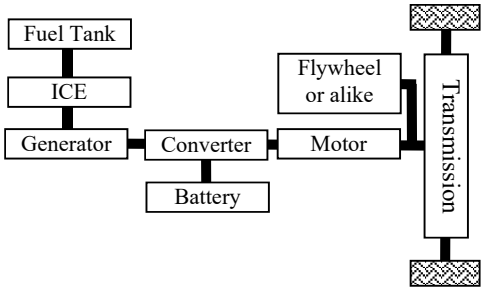

Figure 5: Series HEV with peak power unit

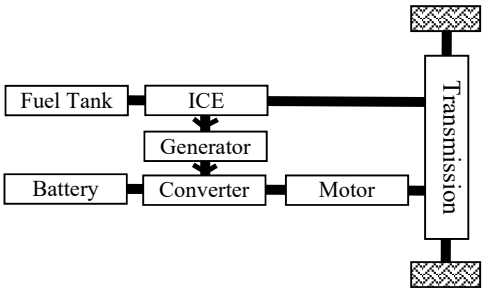

Figure 6: Complex HEV – series/parallel



Figure 7: Toyota's Prius (2004-2099 model), A Series/Parallel HEV

3c). *Bidirectional Series/parallel HEV*: If the power flow in the link between the ICE and the battery in series/parallel

HEV is bidirectional, such as that the generator can also act as motor, and hence there can be 2 electric motors to drive the transmission, if needed. This results in Bidirectional series/parallel HEV as shown in Figure 8. Therefore, there is even more high flexibility in operation modes, but of course higher complexity and costliness.[14]

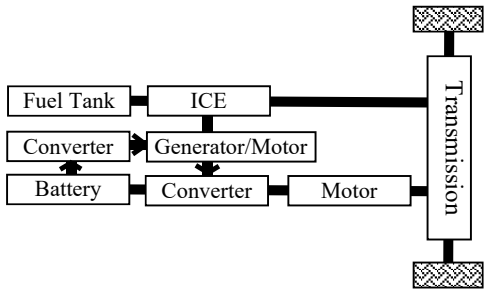

Figure 8: Complex HEV – bidirectional series/parallel

III. DC MOTOR DRIVE

Converter-fed separately excited DC motors [15] are widely used in industrial applications requiring a wide range of speed control and/or frequent starting, breaking, and reversing. The continuous operation of a motor is required in some applications like rolling mills, printing press, mine winders etc. For that the motor is needed to be operated with desired speeds for different time periods along with forward and reverse motion. To control such parameters [16] of the motor, the drive circuit is employed either by analog means or digital means. The microcontroller or processor-based systems have gained prominence. They have certain inherent advantages over their analog counterparts like higher accuracy, drift free performance, better noise immunity, etc. In addition, they also afford flexibility, provide fault diagnostics, and facilitate easy trouble shooting.[17] Initially the microcontroller can be programed to generate the firing pulses for power electronics switching devices like MOSFET or IGBT. The program can be developed further for controlling various parameters of the DC motor like acceleration and deceleration, forward and reverse operation etc. These all controlling depends on the sampling signals which are measured from the DC motor the armature voltage of the motor and field current of the motor [18]. Apart from this, some of the unwanted conditions like short circuit, under voltage, over current, earthing cause hazardous effects on the motor system. So that the Microcontroller based protection scheme for the motor can also be developed to overcome such faulty conditions.

Thus, the robust and multi-purpose peripheral circuit system can be obtained using the intelligent microcontroller IC. Also, the supervisory control for all the essential parameter can be obtained with the help of a single microcontroller IC. [19]

IV. CONVENTIONAL DC DRIVE

In modern electrical drive system, about 50% of the total energy is consumed by the drives which may be either constant speed drives or variable speed drives. [20] The 75% of the system has application with constant speed drives in which energy is wasted across the load like throttling valve or any other parameter of interest. Using solid state control of drives, machine speed is adjusted in such a way that it delivers the required flow rate or any other parameter of interest efficiently.[21]

The demerits associated in the system for implementing other performance requirements with such system are: system becomes bulky, inefficient and inflexible to the change parameters. It is clear that the losses are much more in constant speed drives as compared to the variable speed drives. In conventionally analog control scheme, implementation is done by the hardwired electronics. Also, the Non-linearity of speed sensors poses the problem in efficient control of speed of dc drives. The demerits further associated with such control are its temperature dependency and requirement of major changes. [22].

Earlier when power electronics converters were not available, the ac motor and dc generator were coupled to drive the dc motor. On contrary to this the microcomputer-based control has the merits of software implementation which in turn makes the system reliable and flexible in nature. The control is precise and faster in operation as it depends on the programming for the microcontroller. [23]

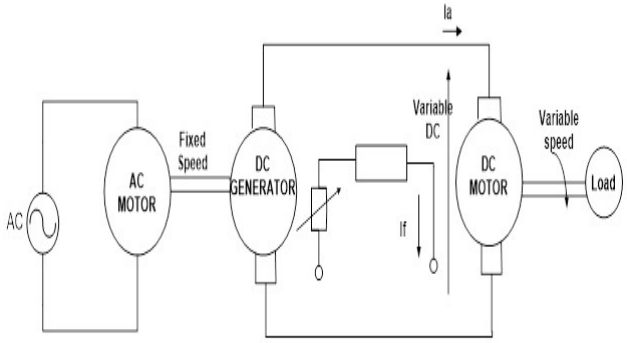

Fig. 9 Conventional DC Drive

Also, the numbers of analog ICs are reduced due to software implementation by means of some instruction sets. Thus, in recent era, it is more advisable and convenient to use the microcontroller for motor operating system. PIC microcontroller is employed for the motor control operation frequently.[24]

V. MICROCONTROLLER BASED SINGLE PHASE DC DRIVE

The main functional blocks are as follows:

1. Power electronics modulator (H Bridge MOSFET)
2. Speed measurement
3. Controller circuit
4. Driver circuit
5. Snubber circuit

The block diagram for single-phase DC motor drive using microcontroller is shown in the Fig 10. Thus, the DC supply is needed for the drive.[25] The power circuit contains

microcontroller-based pulse generation for triggering of power devices used in converters. Here the MOSFET H-bridge is employed. The control technique is of closed loop type. [26].

The microcontroller unit controls the DC motor by processing its controlling parameters that are speed and current signals. In closed feedback loop system, the motor voltage magnitude and polarity can be controlled.[27].

Similarly, the motor current magnitude and polarity can be controlled. Therefore, the motor is allowed to be operated in all four quadrants of V-I plane. [3] Pushbuttons as well as LCD screen is also interfaced here to set various parameters for motor operation like: Acceleration and Deceleration in step speed of the motor.[28]

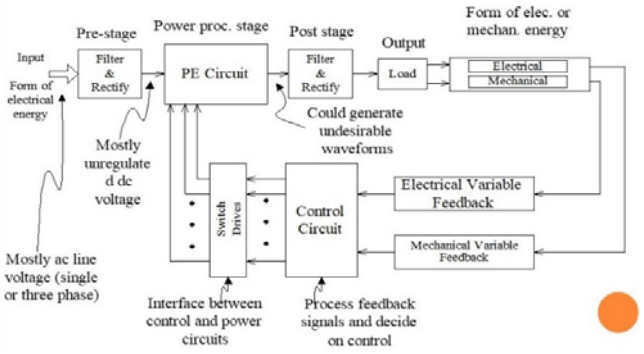

Fig. 10. Block Diagram of DC Drive System.

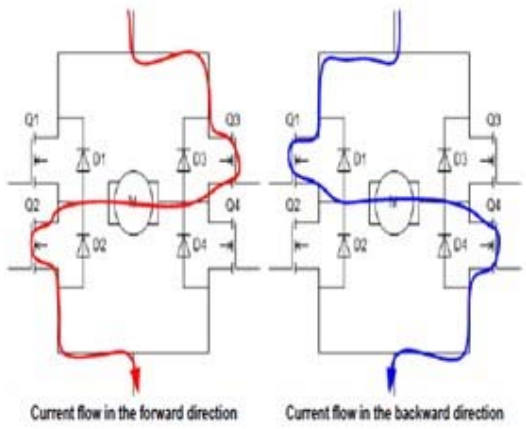

Fig. 11. H- Bridge Power Circuit of DC Drive.

VI. SIMULATION OF H BRIDGE SINGLE PHASE DC DRIVE

H Bridge is electronic power circuit that allows a motor speed and direction to be controlled. Often motors are controlled from some kind of "brain" or microcontroller to accomplish a mechanical goal. The microcontroller provides a instructions to the motor but it cannot provide the power required to drive the motor. [29]

An H Bridge circuit inputs a microcontroller instruction and amplifies them to drive a mechanical motor. The H Bridge take a small electrical signal and translate it into high power output for the mechanical motor.[30]

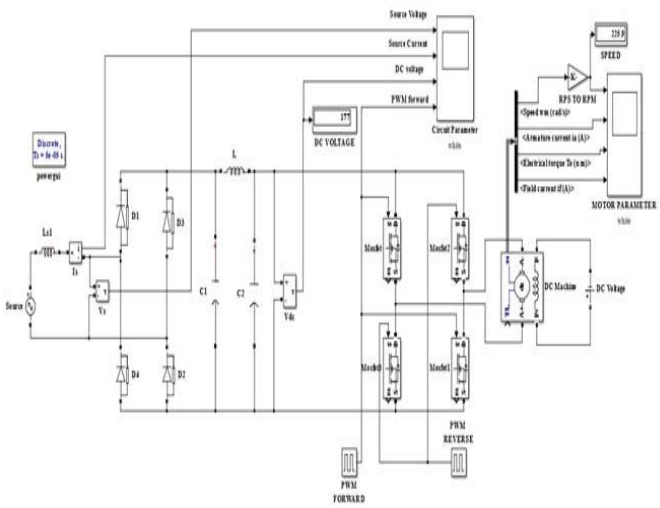

Fig. 12. H- Bridge Simulation Circuit of DC Drive.

The Basic operating mode of an H-Bridge is fairly simple: If Q3 and Q2 are turned on, the left lead of the motor will be connected to ground, while the right lead is connected to the power supply. [31]

Current starts following through the motor which energizes the motor in forward direction and the motor shaft starts spinning. If Q1 and Q4 are turned on, the converse will happen, the motor get energies in the reverse direction, and the shaft will start spinning that way. [32]

If less than full speed operation is intended both of the switches are controlled with PWM fashion. The average voltage seen by the motor will be determined by the ration between ON and OFF time of the PWM signal.[33].

The simulation for the H-bridge Configuration along with diode rectifier is carried out and using MATLAB Simulink r2013 a with discrete simulation type which has the solver ode23t (mod. Stiff/trapezoidal). Circuit for the same is shown in the Fig. 4. DC machine is drawn by two of the MOSFETs at a time. [34]

The simulation results for the motor parameters are shown in the Fig. 5 with 50% duty cycle of the PWM. The waveform indicates the motor speed curve for the forward rotation of the motor, armature current curve, motor torque and field current curve. [35].

It is clearly indicated in the speed curve that the speed is increased in a step manner depending upon the PWM pulses. The PIC16f877a can be programed such that it generates PWM with various duty cycle accordingly the speed requirement.[36]

The PIC16f877a microcontroller has a following features: Only 35 single-word instructions to learn. **Timer0**:8-bit timer/counter with 8-bit prescaler. **Timer1**:16-bit timer/counter with prescaler can be incremented during Sleep via external Crystal/clock **Timer2**: 8-bit timer/counter with 8- bit period register, prescaler and postscaler.[37]

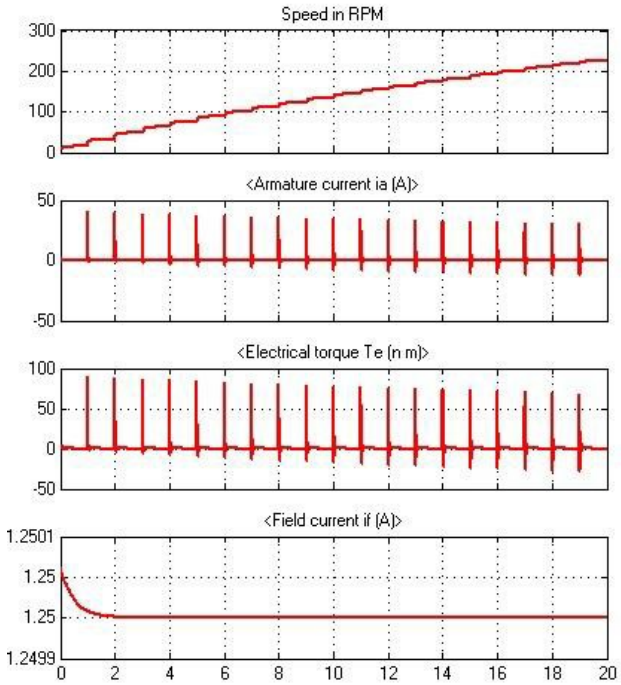

Fig. 13. Simulation Result of DC Drive.

Two Capture, Compare, PWM (CCP) modules: Capture is of 16-bit with maximum resolution 12.5 ns; Compare is of 16-bit with maximum resolution 200 ns; PWM maximum resolution is 10- bit, 100,000 erase/write cycle Enhanced Flash program memory typical, 1,000,000 erase/write cycle Data EEPROM memory typical Data. EEPROM Retention > 40 years. Self- reprogrammable under software control. [38]

A simplest method to control the rotation speed of DC motor is to control the driving voltage. The higher the voltage the higher the speed motor tries to reach. In many applications simple voltage regulation would cause a lot of power loss in control circuit, so *Pulse Width Modulation (PWM)* is used in many DC motor controlling application. The rapid rising and falling edges ensure that the semiconductor power devices are turned on or turned off as fast as practically possible to minimize the switching transition time and the associated switching losses.[39]

Although other considerations, such as parasitic ringing and Electromagnetic Interference (EMI) emission, may impose an upper limit on the turn-on and turn-off speed in practical situations, the resulting finite rise and fall time can be ignored in the analysis of PWM signals and processes in most cases.[40]

The average value of voltage fed to the load is controlled by turning the switch between supply and load ON and OFF at a fast pace. The longer the switch is ON compared to the OFF periods, the higher the power supplied to the load is. The term duty cycle describes the proportion of ON time to the regular interval or period of time, a low duty cycle corresponds to low power, because the power is OFF for most of the time. Duty cycle is expressed in percent, 100% being fully ON.[41]

PWM control technique also allows the switching frequency increment due to the simplicity of the control strategy and the availability of fast switching devices with reasonably power ratings **[**42**].**

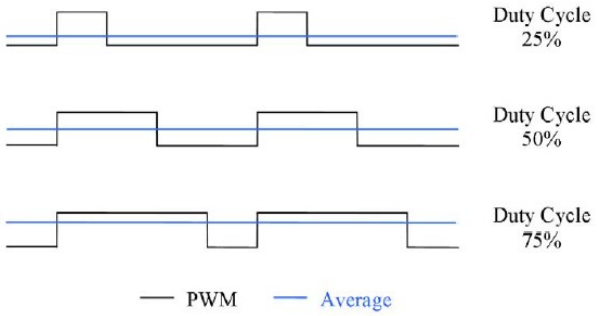

Fig. 14. PWM Pulses of DC Drive.

The PWM pulses are generated using PIC16F877A and the FIG. 14 illustrates the waveforms for the various duty cycle. When these pulses are fed to the MOSFET gate terminal through a gate driver circuit, the average voltage between the two terminals of motor in H-bridge are nearer to its maximum value.[42]

The flowchart given in the Fig.15 illustrates a basic PWM generation using microcontroller. Here the PWM pulse will be given to feedback path and according to required duty cycle it will adjust required value of certain registers.

VII. Conclusion

An Electric Vehicles (EV), also referred to as an Electric Drive Vehicle (EDV), is a vehicle which uses one or more electric motors for propulsion. Thus, Power Electronics Technology (PET) plays an important role in the Electrical Propulsion System (EPS)in order to efficiently drive the electric motor of the vehicle and control the power converters and the associated electronic circuits.

In this paper, the drawbacks of a conventional Drive system are discussed following by the latest microcontroller-based Drive system. PIC16F877A is preferable for the PWM based control system as it contains in-built PWM mode. Also, the DC Drive system undergoes a good system response as the PWM control technique provides a soft starting to the motor so the starting high current can be limited which is supposed to be drawn by the motor from the mains. MOSFET H-bridge

configuration provides bi-directional speed control by driving the appropriate pairs of MOSFETs.

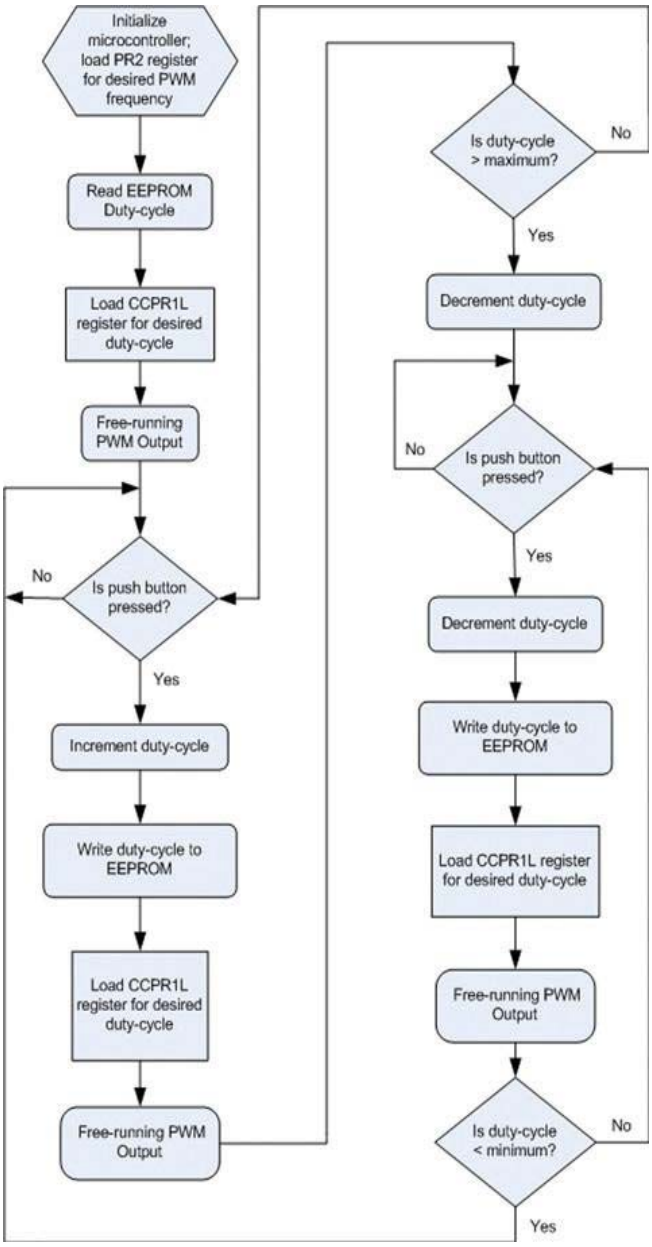

Fig. 15 Flow Chart for H Bridge DC Drive

REFERENCE

1. C. C. Chan, The state of the art of electric, hybrid, and fuel cell vehicles, Proc. IEEE, vol. 95, pp. 704–718, Apr. 2007.

2. G. Maggetto, J. Van Mierlo, Electric and electric hybrid vehicle technology: a survey, IEE Seminar on Electric, Hybrid and Fuel Cell Vehicles, 2000

3. P. Anumolu, G. Banhazl, T. Hilgeman, R. Pirich, Plug-in hybrid vehicles: An overview and performance analysis, IEEE Conference on Systems, Applications and Technology, May 2, 2008.

4. C. C. Chan and K. T. Chau, Modern Electric Vehicle Technology. Oxford, U.K.: Oxford Univ. Press, 2001.

5. M. Bly, Hybrid technologies, Challenge Bibendum HEV Round Table, Shanghai, China, Nov. 14, 2007.

6. Onomura, Hybrid vehicles: Market vision and segmentation, Challenge Bibendum HEV Round Table, Shanghai, China, Nov. 14, 2007.

7. A. Bernstein, The emergence of hybrid vehicles, Challenge Bibendum HEV Round Table, Shanghai, Nov. 14, 2007.

8. Nirav D. Mehta, Anwarul M. Haque, M. V. Makawana "Controller for Speed control of DC Motor Drives : Modeling and Simulations" Published in Proceedings of 2nd International Conference of Emerging Technologies in Engineering, Biomedical , Management and Science (ETEBMS- 16) & International Journal of Applied Research in Science and Engineering (IJARSE), Special issue, ISSN (online) : 2456-124x , pp. 135-141 November 2016

9. Prof. N. D. Mehta, Dr. A. M. Haque, "Design and Implementation of DC Drive Using PIC16F877A Microcontroller for Electrical Vehicle" in International Journal of Engineering Technology, Management and Applied Sciences, (IJETMAS) December – 2017, Vol. - 5, Issue -12, pp. 15- 19 (ISSN 2349-4476) (Scientific Journal Impact Factor : 2.24)

10. H. Krattiger, C. Bondoni, H. Kobi, H. D. Remorini, "Increase Competitive Level by replacing Steam turbines with Electric Adjustable Speed Drive System", IEEE PCIC 2004 conference in San Francisco.

11. Prof. N. D. Mehta, Dr. A. M. Haque, "Analysis and Assessment of Motor Drive Speed Control through Variable Frequency Drive" in International Journal on Future Revolution in Computer Science & Communication Engineering (IJFRCSCE) Volume: 3 Issue: 12 pp.184 – 189 ISSN: 2454-4248 , December 2017 (Impact Factor : 2.293)

12. Technical guide no 1, "Direct Torque Control, The world's most advanced AC drive technology", ABB

13. Punya Jain and Abhishek Vyas, "Simulation of vector-controlled induction motor drive using MATLAB", B. E. thesis of B.E. Electrical, Faculty of Technology and Engineering, The maharaja Sayajirao University, Baroda

14. R. Krishnan, (2005), "Electric motor drives- modeling, analysis and control", Prentice- Hall, India

15. Texas Instruments Europe, "Field Orientated Control of 3-Phase AC-Motors", Literature Number: BPRA073, February 1998

16. N. D. Mehta , B. D. Kanani , B.B. Kadam , "Design, Simulation, Implementation and Control of Digital Self-Compensating method for Integral Cycle Power Control for R-L Load" International Conference on Innovative Science and Engineering Technology – 2011, ICISET – 2011 , at V.

V.P. Rajkot 8 -9th April 2011 pp. 86-90 (ISBN 978-81-906377-5-6)

17. Peter Vas, "Sensorless Vector and Direct Torque Control," Oxford Science Publications, NY, 1990

18. Doki, S., Sangwongwanich, S. and Okuma, S. "Implementation of speed sensorless field oriented vector control using adaptive sliding observer." IEEE-IECON, San Diego, pp. 453-458, 1992.

19. Kubota, H. and Matsuse, K. "Speed sensorless field oriented control of induction machines." IEEE IECON, Bologna, Italy, pp. 1611-1615, 1994.

20. Schauder, C. "Adaptive speed identification for vector control of induction motors without rotational transducers." IEEE Transactions on Industrial Applications, vol. 28, pp. 1054-1061, 1992.

21. Tajima, H. and Hori, Y. "Speed sensorless field-orientation control of the induction machine." IEEE Transactions on Industry Applications, vol. 29, pp. 175-180, 1993

22. Tamai, S., Sugimoto, H. and Yano, M. "Speed sensorless vector control of induction motor with model reference adaptive system." IEEE Industrial Applications Society Annual Meeting, Atlanta, pp. 189-195, 1987.

23. Takahashi, I. and Noguchi, T. "A new quick-response and high efficiency control strategy of an induction motor." IEEE Transactions on Industry Applications, vol. 22, no. 5, pp. 820-827, 1986.

24. Depenbrock, M. "Direct self control (DSC) of inverter–fed induction machine." IEEE Transactions on Power Electronics, vol. 3, no. 4, pp. 420-429, 1988.

25. Vas, P. Sensor less vector and direct torque control. Oxford University Press Inc, Clarendon, 1998.

26. Thomas, G., Halbetler, H. and Deepakraj, M. D. "Control strategies for direct torque control using discrete pulse modulation." IEEE Transactions on Industry Applications, vol. 27, pp. 893-901, 1991.

27. Park, R.H., "Two reaction theory of synchronous machine – Generalized method of analysis – Part 1," AIEE Trans., 48, July 1929, pp. 716-727

28. Hannakam, L., "Dynamic modelling of induction machine on an analogue computer", Regelungstechnik, 1959

29. Hasse, K., "Zum dynamischen Verhalten der Asynchronmaschine bei Betrieb mit variabler Ständerfrequenz und Ständerspannung" ETZ-A 89, 1968, pp. 387-391

30. Blaschke, F., "The principle of field orientation applied to the new trans-vector closed-loop control system for rotating field machines" Siemens-Review 39, 1972, pp. 217–220

31. A.D. Karlis*, K. Kiriakopoulos*, D.P. Papadopoulos* and E.L. Bibeau**, "Comparison of the Field Oriented and Direct Torque Control Methods for Induction Motors used in Electric Vehicles", *Laboratory of Electrical Machines, Department of Electrical and Computer Engineering, Democritus University of Thrace, 12, V. Sofias street, 67100 Xanthi, Greece, **Mechanical and Manufacturing Engineering Department, University of Manitoba Winnipeg, MB R3T 5V6, Canada.

32. Abdelnassir Abdalla, "Torque Ripple Minimization In Direct Torque Control Of Induction", A Thesis of MS, The Graduate Faculty of the University of Akron, May, 2005.

33. M. S. Merzoug, and F. Naceri, "Comparison of Field-Oriented Control and Direct Torque Control for Permanent Magnet Synchronous Motor (PMSM)", World Academy of Science, Engineering and Technology 45 2008.

34. Naceri Farid, Belkacem Sebti , Kercha Mebarka and Benmokrane, "Performance Analysis of Field-Oriented Control and Direct Torque Control for Sensorless Induction Motor Drives",2007 Mediterranean conference on control and automation , july 27-29,2007, Athens-Greece.

35. H. L. Huy, "Comparison of Field-Oriented Control and Direct Torque Control for Induction Motor Drives," 0-7803-5589-X/99/$10.00 © 1999 IEEE.

36. Abdesselam Chikhi1, Mohamed Djarallah1, Khaled Chikhi1,"Comparative Study of Field-Oriented Control and Direct-Torque Control of Induction Motors Using An Adaptive Flux Observer", SERBIAN JOURNAL OF ELECTRICAL ENGINEERING, Vol. 7, No. 1, May 2010, 41-55.

37. Zakdy Sorchini1 and Philip T. Krein2, "Formal Derivation of Direct Torque Control for Induction Machines", 1Student Member, IEEE, 2Fellow, IEEE, IEEE TRANSACTIONS ON POWER ELECTRONICS, VOL. 21, NO. 5, SEPTEMBER 2006, Pages 1426-1428.

38. Hiren M. Patel, Pankit T. Shah, Hemangini V. Patel "Comparative Study of Field Oriented Control and Direct Torque Control of Induction Motor" journal of information, knowledge and research in electrical engineering volume – 01, issue - 02 page 1-7 Nov 10 To Oct 11 ISSN: 0975 – 6736|

39. Theraja, B. L., & Theraja, A. k. (2005). *A Textbook of Electrical Technology-volume 2.* S.Chand.

40. Dubey, G. K. (2001). *Fundamentals of Electrical Drives.* Narosa Publication.

41. Tamer H. Abdelhamid, "Performance of Single-Phase DC Drive System Controlled by Uniform PWM Full- Bridge DC-DC Converter" 10th Mediterranean Electrotechnical Conference, **MEleCon** 2000, Vol. III.

42. Tantos, A. (2011). Retrieved from modular circuits:http://www.modularcircuits.com/h-bridge_secrets1.htm (1998).